MIDLAND COUNTY ROAD COMMISSION

IN COOPERATION WITH

MICHIGAN DEPARTMENT OF TRANSPORTATION
AND
FEDERAL HIGHWAY ADMINISTRATION

PLANS OF PROPOSED

CONTROL SECTION: 56000
JOB NUMBER: 212097

BAILEY BRIDGE AT SMITHS CROSSING ROAD

INGERSOLL TOWNSHIP
MIDLAND COUNTY

PLANS	SHEET NUMBERS
TITLE	1
LEGEND	2
NOTE SHEET	3
TYPICAL CROSS SECTIONS	4-7
MISCELLANEOUS DETAILS	8-10
REMOVAL, CONSTRUCTION AND PROFILE SHEETS	11-19
DETAIL GRADES	20
PAVEMENT MARKING AND SIGNING SHEETS	21-22
RIGGING SCHEME	23
STAGING SHEET	24
GENERAL PLAN OF SITE	25
LOG OF BORINGS	26
GENERAL PLAN OF STRUCTURE	27-29
REMOVAL DETAILS	30
PILE DETAILS	31
ABUTMENT DETAILS	32-33
PIER DETAILS	34-35
REHABILITATION DETAILS	36-43
STRUCTURAL STEEL DETAILS	44-45
SUPERSTRUCTURE DETAILS	46
STEEL REINFORCEMENT DETAILS	47

AREA MAP
NOT TO SCALE

TRAFFIC DATA

493	----	PRESENT ADT (2024)
493	----	FUTURE ADT (2044)
55	----	POSTED SPEED
60	----	DESIGN SPEED
1.2%	----	COMMERCIAL

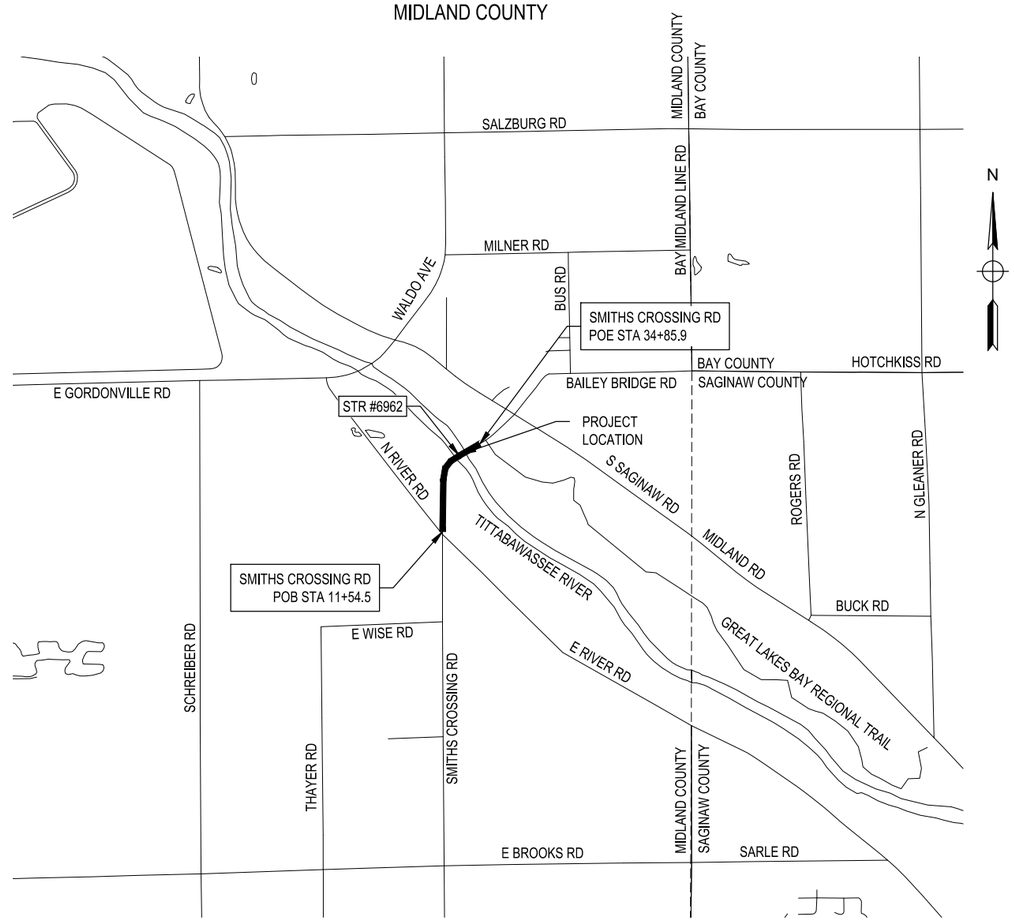

SECTIONS 1 & 2, T13N-R2E

MDOT BRIDGE STANDARD PLANS

MOLDING, BEVEL, LIGHT STANDARD ANCHOR BOLT ASSEMBLY AND NAME PLATE DETAILS	B-103-F*

MDOT ROAD STANDARD PLANS

WHERE THE FOLLOWING ITEMS ARE CALLED FOR ON PLANS. THEY ARE TO BE CONSTRUCTED ACCORDING TO THE MDOT STANDARD PLAN GIVEN BELOW OPPOSITE EACH ITEM UNLESS OTHERWISE INDICATED.

DRAINAGE STRUCTURES	R-1-G
COVER B	R-7-F
MONUMENT BOXES	R-11-E
DRIVEWAY OPENINGS & APPROACHES AND CONCRETE SIDEWALKS	R-29-J*
BUMPER & PARKING RAILS AND MISC. WOOD POSTS	R-74-D
GRANULAR BLANKET, UNDERDRAINS, OUTLET ENDINGS FOR UNDERDRAINS, AND SEWER BULKHEADS	R-80-F*
BEDDING AND FILLING AROUND PIPE CULVERTS	R-82-D
UTILITY TRENCHES	R-83-C
PRECAST CONCRETE END SECTION FOR PIPE CULVERT	R-86-F
STEEL END SECTION	R-88-E*
SOIL EROSION & SEDIMENTATION CONTROL MEASURES	R-96-E
SEEDING AND TREE PLANTING	R-100-I*
GRADING CROSS SECTIONS	R-105-D
SUPERELEVATION AND PAVEMENT CROWNS	R-107-H
SHOULDER AND CENTER LINE CORRUGATIONS	R-112-J*
DELINEATOR INSTALLATIONS	R-127-H*

*SPECIAL DETAILS INCLUDED IN PROPOSAL

MDOT TRAFFIC AND SAFETY STANDARD PLANS

WHERE THE FOLLOWING ITEMS ARE CALLED FOR ON PLANS. THEY ARE TO BE CONSTRUCTED ACCORDING TO THE MDOT STANDARD PLAN GIVEN BELOW OPPOSITE EACH ITEM UNLESS OTHERWISE INDICATED.

TEMPORARY LONGITUDINAL LINE TYPES & PLACEMENT	PAVE-904-A*
LONGITUDINAL LINE TYPES AND PLACEMENT	PAVE-905-E
STANDARD SIGN INSTALLATIONS	SIGN-100-G
ROADSIDE SIGN LOCATIONS AND SUPPORT SPACING	SIGN-120-E
STEEL POSTS	SIGN-200-E
GROUND DRIVEN SIGN SUPPORTS FOR TEMP SIGNS	WZD-100-A*
TEMPORARY TRAFFIC CONTROL DEVICES	WZD-125-E*

*SPECIAL DETAILS INCLUDED IN PROPOSAL

THE DESIGN OF THIS ROAD AND PATH IS BASED ON THE MICHIGAN DEPARTMENT OF TRANSPORTATION STANDARD SPECIFICATIONS FOR CONSTRUCTION, 2020 EDITION, AND SECTION C (3R) OF THE MICHIGAN DEPARTMENT OF TRANSPORTATION LOCAL AGENCY PROGRAMS GUIDELINES FOR GEOMETRICS ON LOCAL AGENCY PROJECTS - DATED 8/03/17, AASHTO GUIDE FOR THE DEVELOPMENT OF BICYCLE FACILITIES, 2012 EDITION, AND THE MICHIGAN MANUAL ON UNIFORM TRAFFIC CONTROL DEVICES, 2011 EDITION.

CONTRACT FOR: 0.45 MILE HMA REHABILITATION, DRAINAGE IMPROVEMENTS, PERMANENT SIGNING AND PAVEMENT MARKINGS.
0.45 MILE HMA SHARED USE PATH AND BICYCLE FACILITIES, CULVERTS, AND PERMANENT SIGNING.
BRIDGE RESTORATION, SUBSTRUCTURE RECONSTRUCTION, AND DECK REPLACEMENT.

SAGINAW OFFICE
230 S. Washington Ave.
Saginaw, MI 48607
Tel. 989-754-4717
Fax. 989-754-4440
www.SpicerGroup.com

FINAL PLAN REVISIONS			
NO.	DATE	AUTH	DESCRIPTION

SAGINAW OFFICE
230 S. Washington Ave.
Saginaw, MI 48607
Tel. 989-754-4717
Fax. 989-754-4440
www.SpicerGroup.com

VERT. (FT) 0 N/A
HORZ. (FT) 0 N/A

SGI PROJECT NO: 131018SG2021
DATE: DECEMBER, 2024
FILE: LP_TITLE.DWG

CS: 56000
JN: 212097

TITLE SHEET
BAILEY BRIDGE AT SMITHS CROSSING

DRAWING	SHEET
TTL	1

12/20/2024 8:45 AM garrett.everitt

UTILITIES

THE EXISTING UTILITIES LISTED BELOW AND SHOWN ON THESE PLANS REPRESENT THE BEST INFORMATION AVAILABLE AT THE TIME OF PREPARING THESE PLANS. THIS INFORMATION DOES NOT RELIEVE THE CONTRACTOR OF THE RESPONSIBILITY TO BE SATISFIED AS TO ITS ACCURACY AND THE LOCATION OF EXISTING UTILITIES.

CONTACTS

AT&T ATT: MICHAEL BAIZ 502 BEACH STREET FLINT, MI 48502	TELEPHONE PHONE: 810-938-3143 EMAIL: mb1269@att.com
CHARTER COMMUNICATIONS ATT: MARK KELLY 1480 S VALLEY CENTER DRIVE BAY CITY, MI 48706	CABLE TV CELL: 989-233-9404 EMAIL: mark.kelly@charter.com
CITY OF MIDLAND ATT: SHANE BJORGE 333 W. ELLSWORTH STREET MIDLAND, MI 48640	STORM SEWER AND ROADS PHONE: 989-837-3353 EMAIL: sbjorge@midland-mi.org
CITY OF MIDLAND ATT: TOM HOBLET 4811 N. SAGINAW ROAD MIDLAND, MI 48640	WATER PHONE: 989-837-6958 EMAIL: thoblet@midland-mi.org
CITY OF MIDLAND ATT: STEVE SMITH 2125 AUSTIN STREET MIDLAND, MI 48642	SANITARY SEWER PHONE: 989-837-3504 EMAIL: ssmith@midland-mi.org
CONSUMERS ENERGY ATT: EVAN HUIZENGA 3201 E. COURT STREET FLINT, MI 48506	GAS CELL: 810-247-8227 EMAIL: evan.huizenga@cmsenergy.com
CONSUMERS ENERGY ATT: VIRGIE DOWNS 2400 WEISS STREET SAGINAW, MI 48602	ELECTRIC PHONE: 989-791-5938 EMAIL: virgie.downs@cmsenergy.com
LAKE NET, LLC ATT: CHRIS FABIEN 16690 GRATIOT ROAD HEMLOCK, MI 48626	FIBER OPTIC PHONE: 989-245-2289
MIDLAND COUNTY DRAIN COMMISSION ATT: JOSEPH SOVA 220 WEST ELLSWORTH STREET MIDLAND, MI 48640	COUNTY DRAINS PHONE: 989-832-6770 EMAIL: jsova@co.midland.mi.us
MIDLAND COUNTY ROAD COMMISSION ATT: JONATHAN MYERS, P.E. 2334 NORTH MERIDIAN ROAD SANFORD, MI 48657	COUNTY ROADS PHONE: 989-687-9060 EMAIL: jon@midlandroads.com

PLAN SHEET REMOVAL LEGEND

COLD MILLING HMA SURFACE		ABANDON	A
HMA SURFACE REMOVE		BULKHEAD	B
REMOVING PAVEMENT		CLEARING	C
REMOVING SIDEWALK		REMOVING	R
HMA BASE CRUSHING AND SHAPING		SAVE	S
REMOVING CURB, GUTTER AND CURB & GUTTER			

SYMBOLS LEGEND

- ST - STORM MANHOLE
- SA - SANITARY MANHOLE
- W - WATER MANHOLE
- T - TELEPHONE MANHOLE
- E - ELECTRIC MANHOLE
- PROPOSED MANHOLE
- CATCHBASIN
- CURB CATCHBASIN
- PROPOSED CATCHBASIN
- CULVERT END SECTION
- PROPOSED CULVERT END SECTION
- FIRE HYDRANT
- PROPOSED FIRE HYDRANT
- GAS VALVE
- WATER VALVE
- PROPOSED WATER VALVE
- WATER CURB STOP
- WATER METER
- TELEPHONE PEDESTAL
- POWER POLE
- TELEPHONE POLE
- POWER AND TELEPHONE POLE
- LIGHT POLE
- GUY ANCHOR AND POLE
- PERMANENT UTILITY MARKER
- CABLE TV PEDESTAL
- TRANSFORMER
- ELECTRICAL PEDESTAL
- EROSION CONTROL ITEM NUMBER (SEE STANDARD PLAN R-96 SERIES)
- MAIL BOX
- BARRIER FREE PARKING
- SPRINKLER
- RAILROAD SIGNAL
- ANTENNA
- SATELLITE DISH
- AC - AIR CONDITIONING UNIT
- SOIL BORING
- BENCH MARK
- CONTROL POINT
- FOUND SURVEY CORNER
- SET 3/4" IRON PIPE
- 1/4 SECTION CORNER
- BREAK IN LINE
- STUMP
- WETLANDS
- PINE
- BUSH
- TREE
- M.W. - MONITORING WELL
- HAND HOLE
- EXISTING SIGN-1 POST
- PROPOSED SIGN-1 POST
- EXISTING SIGN-2 POSTS
- PROPOSED SIGN-2 POSTS

HAZARDOUS OR FLAMMABLE MATERIAL	- GAS OR ELECTRICAL LINES LABEL
CAUTION - CRITICAL UTILITY	- FIBER OPTIC, TELEPHONE LINES, AND WATER MAIN LABEL

ADJ-_	- DR STRUCTURE COVER, ADJ, CASE _	SUPPORT	- CONTRACTOR TO SUPPORT UTILITY POLE
ADJ-B/O	- ADJUST BY OTHERS	PRESERVE	- PRESERVE MONUMENT BOX
REL-B/O	- RELOCATE BY OTHERS	PROTECT	- PROTECT
CR-_	- CURB RAMP TYPE	WSA-_	- WATER SHUTOFF, ADJ, CASE _
GBA-_	- GATE BOX, ADJ, CASE _	MWA-_	- MONITORING WELL, ADJ, CASE _
		REL-_	- RELOCATE WITH CASE _

LINE TYPE LEGEND

- EXISTING WATER MAIN
- EXISTING SANITARY SEWER
- EXISTING STORM SEWER
- EXISTING UNDERGROUND TELEPHONE
- EXISTING UNDERGROUND FIBER OPTIC
- EXISTING UNDERGROUND CABLE TV
- EXISTING GAS MAIN
- EXISTING UNDERGROUND ELECTRIC
- EXISTING OVERHEAD UTILITY
- EXISTING FENCE
- EXISTING CURB & GUTTER
- EXISTING BUILDING
- PROPOSED STORM SEWER
- PROPOSED CURB & GUTTER
- PROPOSED REVERSE PAN CURB & GUTTER
- SLOPE STAKE LINE
- RIGHT-OF-WAY
- EASEMENT
- GUARDRAIL
- TREE LINE
- LANDSCAPING

PLAN SHEET CONSTRUCTION LEGEND

- HMA APPROACH

3/12/2024 11:19 AM ryan.sullivan

FINAL PLAN REVISIONS			
NO.	DATE	AUTH	DESCRIPTION

SAGINAW OFFICE
230 S. Washington Ave.
Saginaw, MI 48607
Tel. 989-754-4717
Fax. 989-754-4440
www.SpicerGroup.com

VERT. (FT) 0 N/A
HORZ. (FT) 0 N/A

SGI PROJECT NO: 131018SG2021
DATE: MARCH, 2024
FILE: LP_LEGEND.DWG

CS: 56000
JN: 212097

LEGEND
BAILEY BRIDGE AT SMITHS CROSSING

DRAWING: LGND
SHEET: 2

GENERAL NOTES

UNDERGROUND UTILITIES/MISS DIG
FOR PROTECTION OF UNDERGROUND UTILITIES AND IN CONFORMANCE WITH PUBLIC ACT 174, 2013, THE CONTRACTOR SHALL DIAL 1-800-482-7171 OR 811 A MINIMUM OF THREE FULL WORKING DAYS, EXCLUDING SATURDAYS, SUNDAYS, AND HOLIDAYS PRIOR TO BEGINNING EACH EXCAVATION IN AREAS WHERE PUBLIC UTILITIES HAVE NOT BEEN PREVIOUSLY LOCATED. MEMBERS WILL THUS BE ROUTINELY NOTIFIED. THIS DOES NOT RELIEVE THE CONTRACTOR OF THE RESPONSIBILITY OF NOTIFYING UTILITY OWNERS WHO MAY NOT BE A PART OF THE "MISS DIG" ALERT SYSTEM.

THE EXISTING UTILITIES ON THESE DRAWINGS HAVE BEEN SHOWN ACCORDING TO THE BEST AVAILABLE INFORMATION. CONTRACTOR SHALL FIELD LOCATE ALL UTILITIES PRIOR TO BEGINNING CONSTRUCTION AND SHALL NOTIFY THE ENGINEER AS TO WHERE POSSIBLE CONFLICT EXISTS.

EXISTING WATER MAINS AND SEWERS
THE CONTRACTOR SHALL BE RESPONSIBLE FOR ANY DAMAGE TO PROPERLY IDENTIFIED EXISTING WATER MAINS AND/OR EXISTING SEWERS DURING THE CONSTRUCTION OF THIS PROJECT.

ADJUSTING MONUMENT BOXES
ALL GOVERNMENT CORNERS ON THIS PROJECT SHALL BE PRESERVED, WHETHER SHOWN OR NOT. IT MAY BE NECESSARY TO PLACE OR ADJUST MONUMENT BOXES, AS REQUIRED.

PAVEMENT MARKINGS AND SIGNS
ALL PERMANENT PAVEMENT MARKINGS, SHAPES, AND DIMENSIONS SHALL CONFORM WITH MDOT PAVEMENT MARKING TYPICALS PAVE-900 SERIES.

SOIL EROSION MEASURES
APPROPRIATE SOIL EROSION AND SEDIMENTATION CONTROL MEASURES SHALL BE IN PLACE PRIOR TO EARTH-DISTURBING ACTIVITIES. PLACE TURF ESTABLISHMENT ITEMS AS SOON AS POSSIBLE ON POTENTIAL ERODABLE SLOPES AS DIRECTED BY THE ENGINEER. CRITICAL DITCH GRADES SHALL BE PROTECTED WITH EITHER SOD OR SEED/MULCH OR MULCH BLANKET AS DIRECTED BY THE ENGINEER.

SOIL EROSION AND SEDIMENTATION CONTROL MEASURES
IT IS THE RESPONSIBILITY OF THE CONTRACTOR TO ENSURE THAT SOIL EROSION AND SEDIMENTATION CONTROL MEASURES ARE IN PLACE AND MAINTAINED UNTIL THE CONTRACT HAS BEEN COMPLETED AND ACCEPTED. MEASURES SHALL ONLY BE PAID FOR ONCE.

SEED MIXTURE
THE DESIGNATION FOR THE PERMANENT TURF SEED MIXTURE ON THIS PROJECT SHALL BE THM.

DRAINAGE STRUCTURE OFFSETS AND ELEVATIONS
DRAINAGE STRUCTURE IN PROPOSED CURB - OFFSETS AND ELEVATIONS SHOWN ARE TO THE BACK AND TOP OF CURB. ALIGN THE STRUCTURE WITH THE BACK OF THE CASTING AND THE TOP OF THE CASTING FLUSH WITH THE PROPOSED BACK AND TOP OF CURB. DRAINAGE STRUCTURES IN OUTLAWN AREA AND PAVED AREA - OFFSET SHOWN IS TO CENTER OF STRUCTURE. RIM ELEVATIONS FOR DOME COVERS AND FLAT COVERS ARE TO THE TOP OF THE CASTING FRAME

GENERAL NOTES (CONT.)

LAWN SPRINKLERS/LANDSCAPING
OWNERS OF EXISTING LAWN SPRINKLER SYSTEMS AND/OR LANDSCAPING SHALL BE NOTIFIED (IN WRITING WITH A COPY SENT TO THE ENGINEER) BY THE CONTRACTOR TWO WEEKS IN ADVANCE OF ANY WORK TO BE DONE THAT WILL AFFECT THOSE SYSTEMS AND/OR LANDSCAPING. IF THE PROPERTY OWNER FAILS TO RELOCATE THE LAWN SPRINKLER SYSTEM PRIOR TO THE CONTRACTOR BEGINNING WORK, AND IF THE CONTRACTOR CUTS THE SYSTEM DURING THE CONSTRUCTION, THE CONTRACTOR SHALL CAP THE SYSTEM PIPE AND WITNESS THE LOCATION OF THE CAP WITH A WOODEN STAKE FOR THE PROPERTY OWNERS USE. THE CONTRACTOR SHALL PLACE THE SALVAGED SPRINKLER HEADS ON THE BACK OF THE RIGHT OF WAY. IF THE PROPERTY OWNER FAILS TO RELOCATE THE LANDSCAPING PRIOR TO THE CONTRACTOR BEGINNING WORK, THE CONTRACTOR SHALL CAREFULLY SALVAGE THE LANDSCAPING ITEMS AND STOCKPILE THEM ON THE BACK OF THE RIGHT OF WAY OR AT A LOCATION DESIGNATED BY THE ENGINEER FOR THE PROPERTY OWNER. ANY OTHER MODIFICATION TO THE LAWN SPRINKLER SYSTEMS AND/0R LANDSCAPING, IS THE RESPONSIBILITY OF THE OWNER AND IS NOT PART OF THIS CONTRACT. THIS WORK WILL NOT BE PAID FOR SEPARATELY.

CONNECTIONS TO EXISTING CULVERTS/SEWERS
THE EXTENSIONS/CONNECTIONS TO EXISTING CULVERTS/SEWERS ON THIS PROJECT MAY REQUIRE EXTRA WORK TO OBTAIN A TIGHT SEAL AT THE JOINT CONNECTING NEW PIPE TO EXISTING PIPE. THE JOINT BETWEEN THE EXISTING AND NEW PIPES SHALL BE CONSTRUCTED ACCORDING TO THE MICHIGAN DEPARTMENT OF TRANSPORTATION STANDARD SPECIFICATIONS FOR CONSTRUCTION, AND AS DIRECTED BY THE ENGINEER. ANY EXTRA WORK REQUIRED TO OBTAIN TIGHT JOINTS WILL NOT BE PAID FOR SEPARATELY BUT WILL BE INCLUDED IN COMPENSATION FOR NEW PIPE.

PROPERTY OWNERS
PROPERTY OWNERS' NAMES, WHERE SHOWN, ARE FOR INFORMATION ONLY, AND THEIR ACCURACY IS NOT GUARANTEED.

SAWCUTS
PAYMENT FOR SAWCUTS REQUIRED TO REMOVE MISCELLANEOUS ITEMS, PAVEMENT AND/OR CURB AND GUTTER SHALL BE INCLUDED IN THOSE REMOVAL ITEMS.

TOPSOIL
CONTRACTOR SHALL REMOVE AND DISPOSE, OR SALVAGE AND STORE TOPSOIL A MINIMUM OF 4" DEEP. SALVAGED TOPSOIL SHALL BE STORED ON-SITE UNLESS WRITTEN PERMISSION IS OBTAINED AT AN OFF-SITE LOCATION. COST TO REMOVE AND DISPOSE, OR SALVAGE AND STORE TOPSOIL SHALL BE INCLUDED IN THE PAYMENT FOR OTHER ITEMS.

SALVAGED MATERIALS
IF CONTRACTORS CHOOSES TO USE SALVAGED MATERIALS FROM PROJECT TO MAINTAIN ACCESS, IT SHALL BE PLACED, MAINTAINED, AND REMOVED WHEN NO LONGER NEEDED AT CONTRACTOR'S EXPENSE.

MAINTAINING TRAFFIC QUANTITIES

JN 212097		
CAT 1		
6	Ea	Barricade, Type III, High Intensity, Double Sided, Lighted, Furn
6	Ea	Barricade, Type III, HIgh Intensity, Double Sided, Lighted, Oper
2	Ea	Pedestrian Type II Barricade, Temp
2	Ea	Lighted Arrow, Type C, Furn
2	Ea	Lighted Arrow, Type C, Oper
1	LSUM	Minor Traf Devices
216	Ft	Pavt Mrkg, Wet Reflective, Type R, Tape, 4 inch, Yellow, Temp
70	Ea	Plastic Drum, Flourescent, Furn
70	Ea	Plastic Drum, Flourescent, Oper
216	Ft	Pavt Mrkg, Wet Reflective, Type NR, Tape, 4 inch, Yellow, Temp
20	Ea	Sign Cover
409	Sft	Sign, Type B, Temp, Prismatic, Furn
409	Sft	Sign, Type B, Temp, Prismatic, Oper
16	Sft	Sign, Type B, Temp, Prismatic, Spec, Furn
16	Sft	Sign, Type B, Temp, Prismatic, Spec, Oper
1	LSUM	Traf Regulator Control

MISCELLANEOUS ESTIMATES

THE FOLLOWING ITEMS OF WORK SHALL BE DONE AS THEY APPLY THROUGHOUT THE PROJECT. THESE ITEMS ARE NOT DETAILED OR INCLUDED ON THE PLAN AND PROFILE SHEETS:

JN 212097	JN 212097		
CAT 1	CAT 3		
1		LSUM	Mobilization, Max ____
5		Cyd	Masonry and Conc Structure, Rem
	0.6	Sta	Ditch Cleanout
250		Cyd	Subgrade Undercutting, Type II
500		Ft	Erosion Control, Silt Fence
480		Ft	Video Taping Sewer and Culv Pipe
100		Ft	Sump Pump Lead and Drain Tile Connection
100		Ft	Underdrain, Subgrade, 6 inch
25		Ft	Underdrain Outlet, 6 inch
2		Ea	Underdrain, Outlet Ending, 6 inch
8		Ea	Post, Mailbox
10		Syd	Riprap, Plain
1		LSUM	Site Preparation, Max
1		LSUM	Watering and Cultivating, First Season, Min
1		LSUM	Watering and Cultivating, 2nd Season, Min
500		Syd	Turf Reinforcement Mat
23490		Sft	Non Selective Weed Spray Under Asphalt
3600	1500	Syd	Slope Restoration, Modified

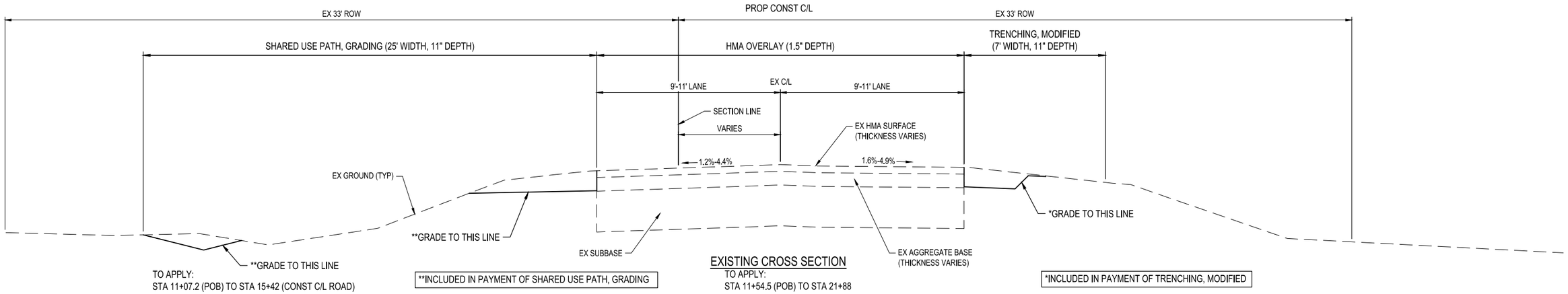

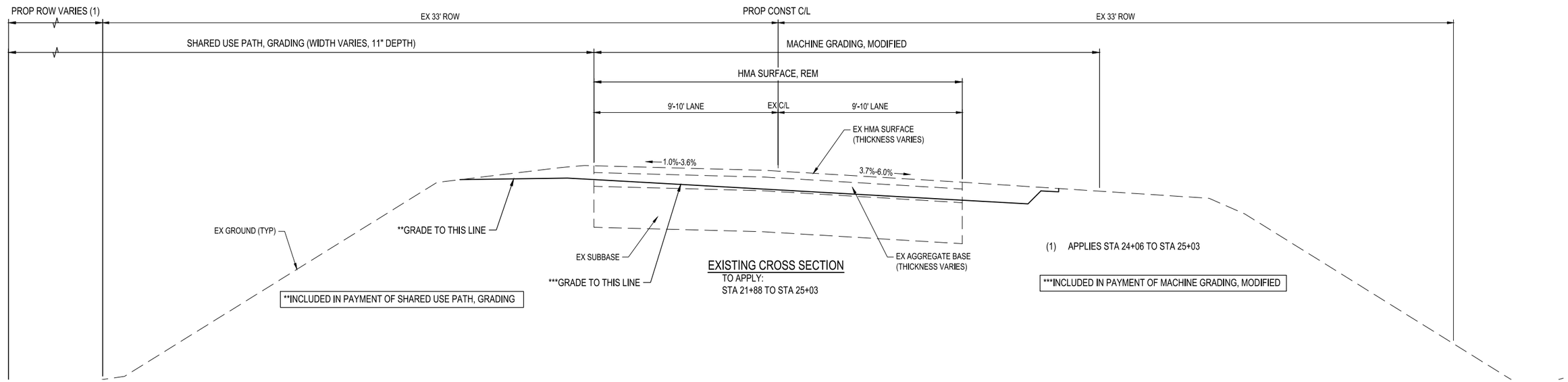

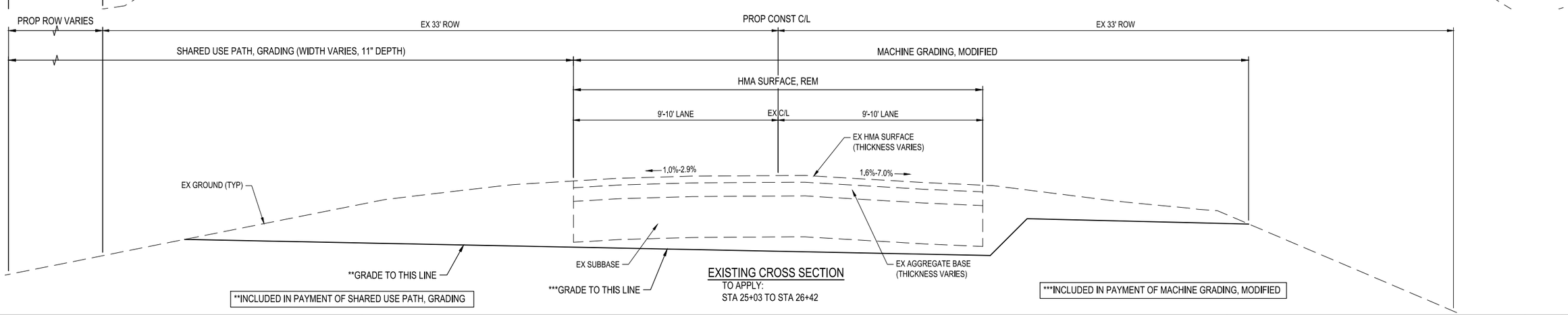

9/18/2024 12:09 PM ryan.sullivan

FINAL PLAN REVISIONS			
NO.	DATE	AUTH	DESCRIPTION

SAGINAW OFFICE
230 S. Washington Ave.
Saginaw, MI 48607
Tel. 989-754-4717
Fax. 989-754-4440
www.SpicerGroup.com

VERT. (FT) 0 — N/A
HORZ. (FT) 0 — 5

SGI PROJECT NO: 131018SG2021
DATE: SEPTEMBER, 2024
FILE: LP_TYPS.DWG

CS: 56000
JN: 212097

TYPICAL CROSS SECTIONS
BAILEY BRIDGE AT SMITHS CROSSING

DRAWING	SHEET
TYP1	4

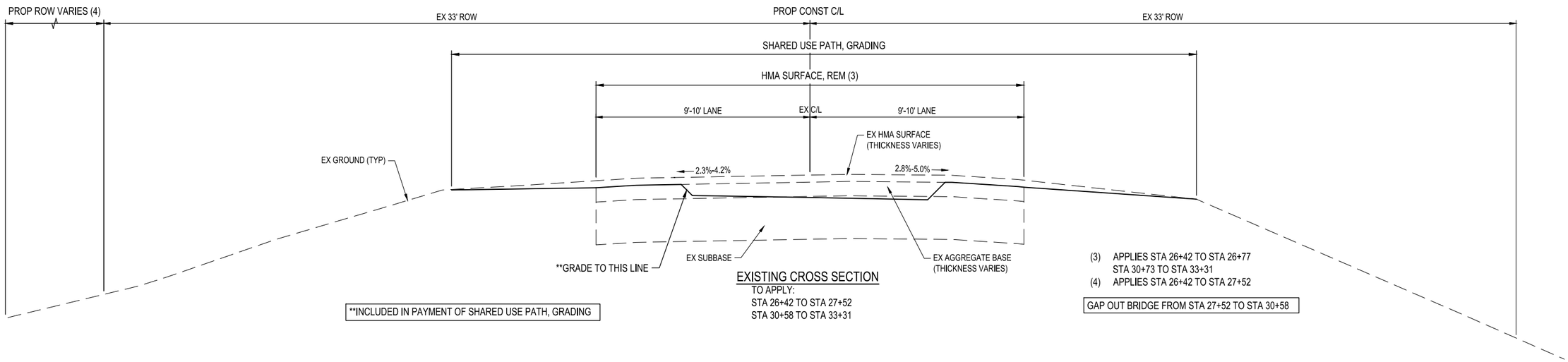

EXISTING CROSS SECTION
TO APPLY:
STA 26+42 TO STA 27+52
STA 30+58 TO STA 33+31

(3) APPLIES STA 26+42 TO STA 26+77
STA 30+73 TO STA 33+31
(4) APPLIES STA 26+42 TO STA 27+52

**INCLUDED IN PAYMENT OF SHARED USE PATH, GRADING

GAP OUT BRIDGE FROM STA 27+52 TO STA 30+58

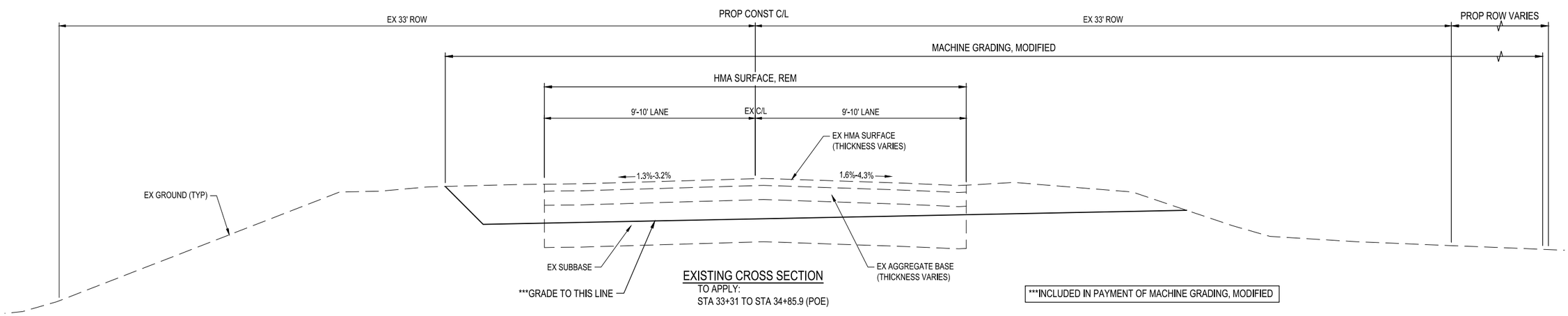

EXISTING CROSS SECTION
TO APPLY:
STA 33+31 TO STA 34+85.9 (POE)

***INCLUDED IN PAYMENT OF MACHINE GRADING, MODIFIED

10/4/2023 8:58 AM ryan.sullivan

FINAL PLAN REVISIONS			
NO.	DATE	AUTH	DESCRIPTION

SAGINAW OFFICE
230 S. Washington Ave.
Saginaw, MI 48607
Tel. 989-754-4717
Fax. 989-754-4440
www.SpicerGroup.com

VERT. (FT) 0 N/A
HORZ. (FT) 0 5

SGI PROJECT NO: 131018SG2021
DATE: OCTOBER, 2023
FILE: LP_TYPS.DWG

CS: 56000
JN: 212097

TYPICAL CROSS SECTIONS
BAILEY BRIDGE AT SMITHS CROSSING

DRAWING	SHEET
TYP2	5

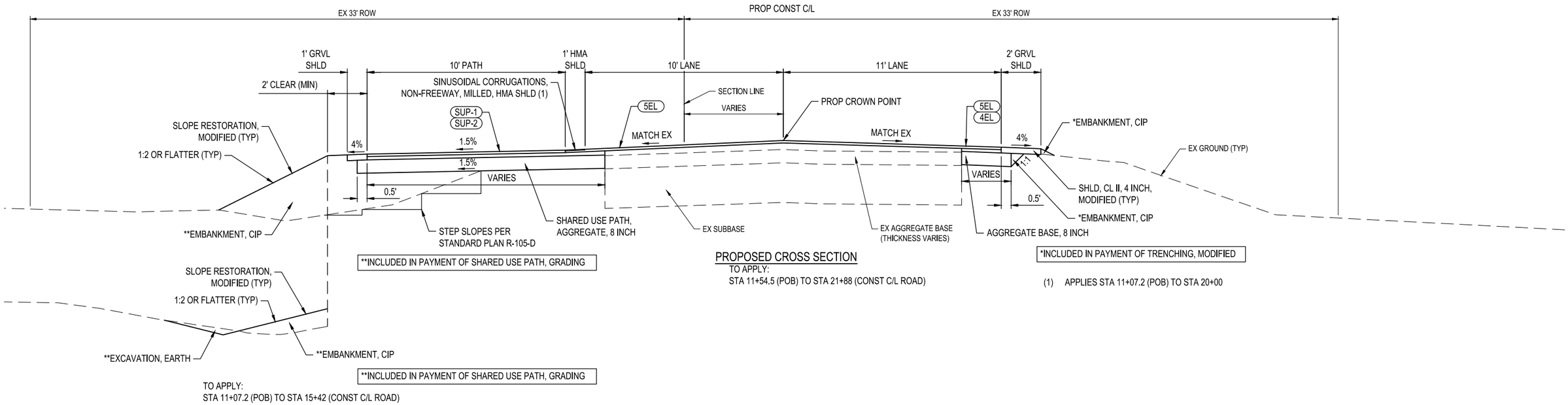

PROPOSED CROSS SECTION

TO APPLY:
STA 11+54.5 (POB) TO STA 21+88 (CONST C/L ROAD)

(1) APPLIES STA 11+07.2 (POB) TO STA 20+00

TO APPLY:
STA 11+07.2 (POB) TO STA 15+42 (CONST C/L ROAD)

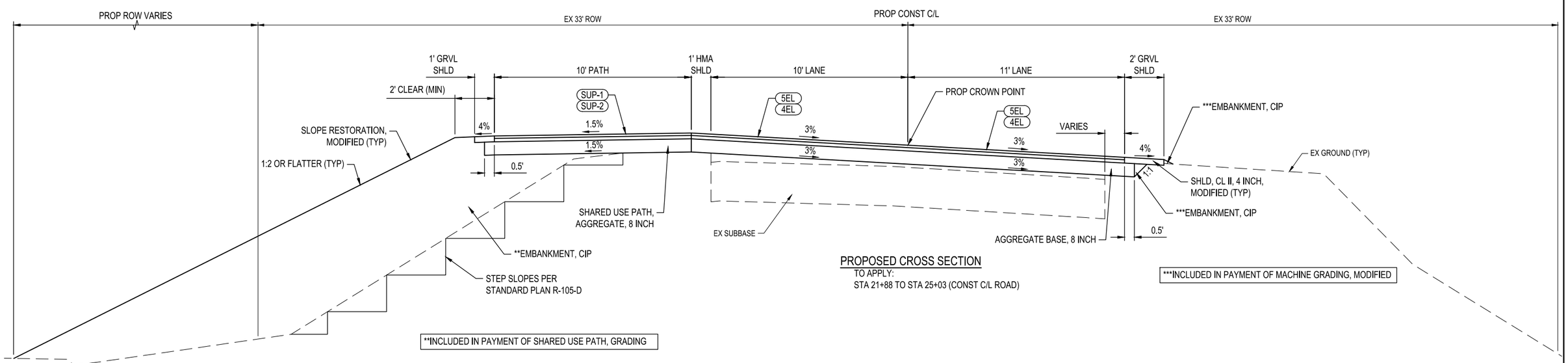

PROPOSED CROSS SECTION

TO APPLY:
STA 21+88 TO STA 25+03 (CONST C/L ROAD)

HMA APPLICATION ESTIMATE

IDENT NO.	ITEM	RATE LBS PER SYD	PERFORMANCE GRADE	REMARKS
5EL	HMA, 5EL	165	58-28	HMA TOP COURSE
4EL	HMA, 4EL	220	58-28	HMA LEVELING COURSE
SUP-1	SHARED USE PATH, HMA	165	58-28	HMA, 5EL TOP COURSE
SUP-2	SHARED USE PATH, HMA	220	58-28	HMA, 4EL LEVELING COURSE
HA	HMA APPROACH	385	58-28	HMA, 5EL TOP COURSE EST @ 165#/SYD; HMA, 4EL LEVELING COURSE EST @ 220#/SYD

PLACE HMA BOND COAT AT 0.05-0.15 GAL/SYD BETWEEN LAYERS AS DIRECTED BY THE ENGINEER (INCLUDED IN PAYMENT FOR HMA PAVING)
THE AGGREGATE WEAR INDEX (AWI) FOR THE TOP COURSE SHALL BE 220 MINIMUM

FOR INFORMATION ONLY

TRENCHING, MODIFIED	
VOLUME	ITEM
28 CYD	EMBANKMENT, CIP
260 CYD	EXCAVATION, EARTH

FOR INFORMATION ONLY

SHARED USE PATH, GRADING	
VOLUME	ITEM
2174 CYD	EMBANKMENT, CIP
1568 CYD	EXCAVATION, EARTH

FOR INFORMATION ONLY

MACHINE GRADING, MODIFIED	
VOLUME	ITEM
1050 CYD	EMBANKMENT, CIP
1638 CYD	EXCAVATION, EARTH

FINAL PLAN REVISIONS

NO.	DATE	AUTH	DESCRIPTION

SAGINAW OFFICE
230 S. Washington Ave.
Saginaw, MI 48607
Tel. 989-754-4717
Fax. 989-754-4440
www.SpicerGroup.com

VERT. (FT) 0 N/A
HORZ. (FT) 0 5

SGI PROJECT NO: 131018SG2021
DATE: SEPTEMBER, 2024
FILE: LP_TYPS.DWG
CS: 56000
JN: 212097

TYPICAL CROSS SECTIONS
BAILEY BRIDGE AT SMITHS CROSSING

DRAWING: TYP3
SHEET: 6

9/18/2024 4:20 PM ryan.sullivan

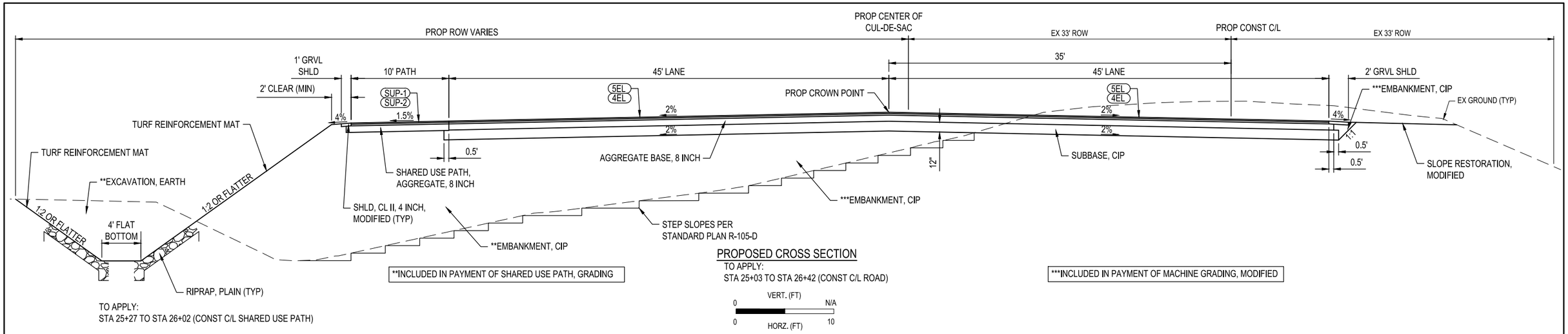

PROPOSED CROSS SECTION

TO APPLY:
STA 25+03 TO STA 26+42 (CONST C/L ROAD)

TO APPLY:
STA 25+27 TO STA 26+02 (CONST C/L SHARED USE PATH)

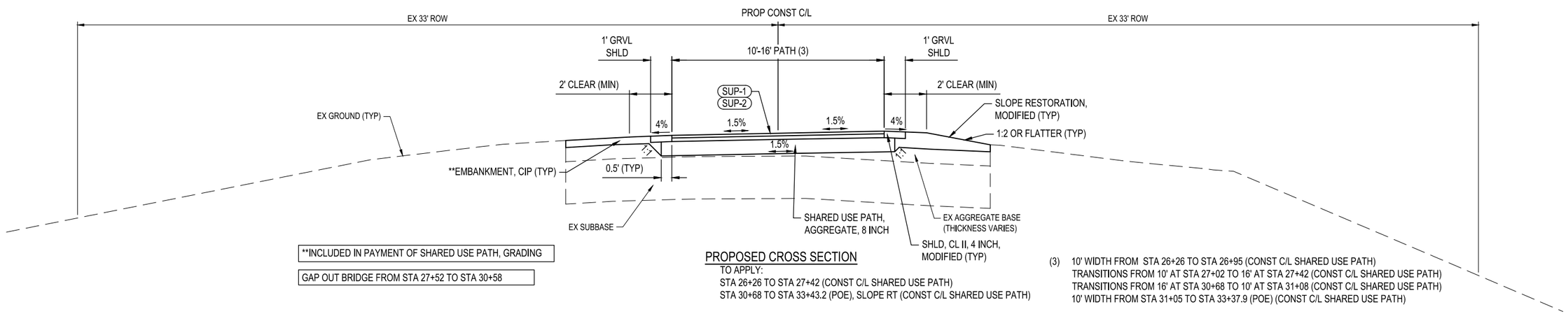

**INCLUDED IN PAYMENT OF SHARED USE PATH, GRADING

GAP OUT BRIDGE FROM STA 27+52 TO STA 30+58

PROPOSED CROSS SECTION

TO APPLY:
STA 26+26 TO STA 27+42 (CONST C/L SHARED USE PATH)
STA 30+68 TO STA 33+43.2 (POE), SLOPE RT (CONST C/L SHARED USE PATH)

(3) 10' WIDTH FROM STA 26+26 TO STA 26+95 (CONST C/L SHARED USE PATH)
TRANSITIONS FROM 10' AT STA 27+02 TO 16' AT STA 27+42 (CONST C/L SHARED USE PATH)
TRANSITIONS FROM 16' AT STA 30+68 TO 10' AT STA 31+08 (CONST C/L SHARED USE PATH)
10' WIDTH FROM STA 31+05 TO STA 33+37.9 (POE) (CONST C/L SHARED USE PATH)

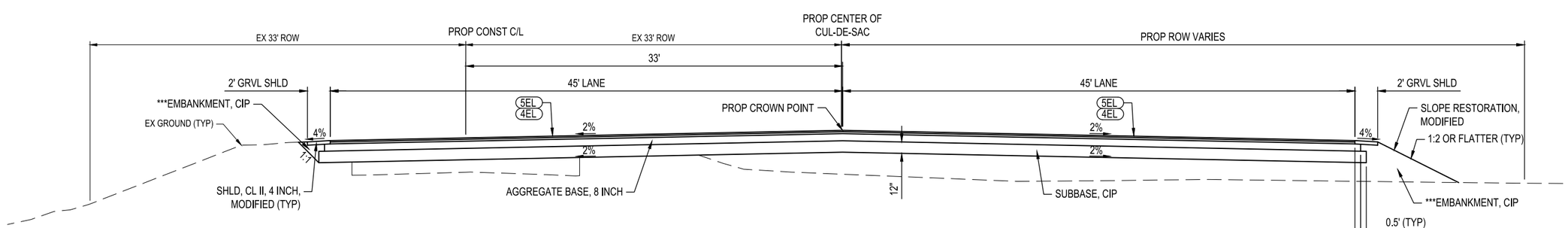

PROPOSED CROSS SECTION

TO APPLY:
STA 33+31 TO STA 34+85.9 (POE) (CONST C/L ROAD)

***INCLUDED IN PAYMENT OF MACHINE GRADING, MODIFIED

VERT. (FT) 0 N/A
HORZ. (FT) 0 10

9/18/2024 12:09 PM ryan.sullivan

FINAL PLAN REVISIONS			
NO.	DATE	AUTH	DESCRIPTION

Spicer group
SAGINAW OFFICE
230 S. Washington Ave.
Saginaw, MI 48607
Tel. 989-754-4717
Fax. 989-754-4440
www.SpicerGroup.com

VERT. (FT) 0 N/A
HORZ. (FT) 0 5

SGI PROJECT NO: 131018SG2021
DATE: SEPTEMBER, 2024
FILE: LP_TYPS.DWG

CS: 56000
JN: 212097

TYPICAL CROSS SECTIONS
BAILEY BRIDGE AT SMITHS CROSSING

DRAWING	SHEET
TYP4	7

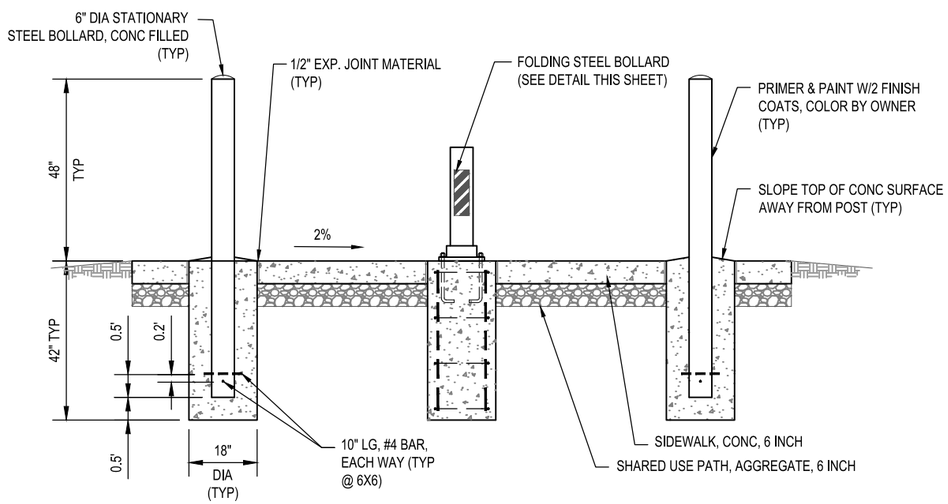

BOLLARD SYSTEM ELEVATION

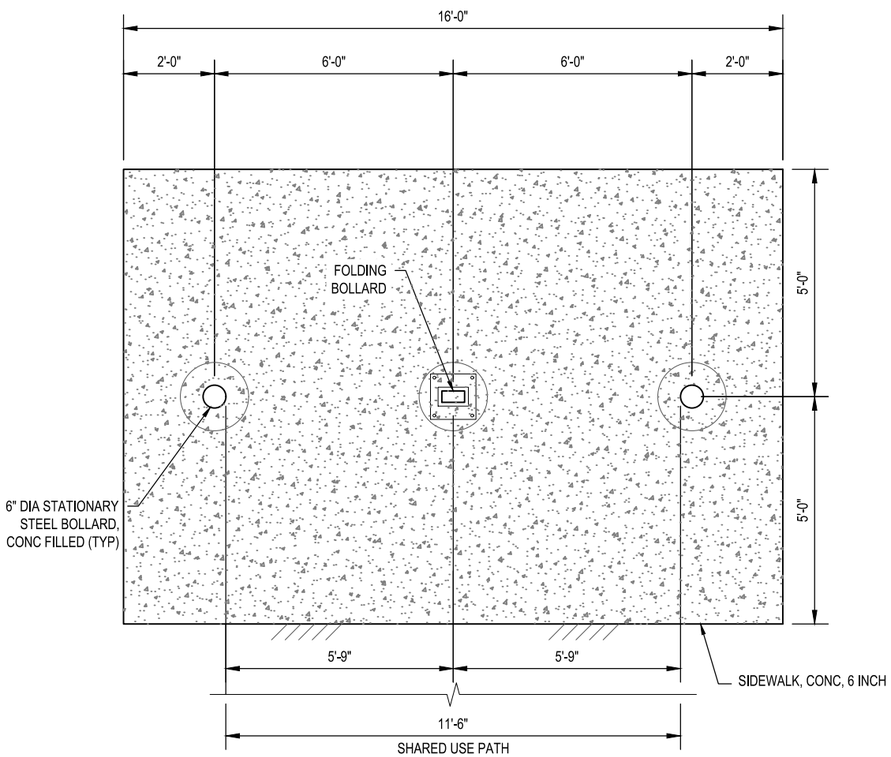

BOLLARD TOP VIEW

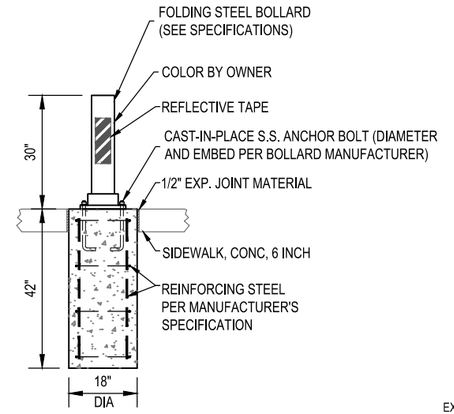

FOLDING STEEL BOLLARD DETAIL

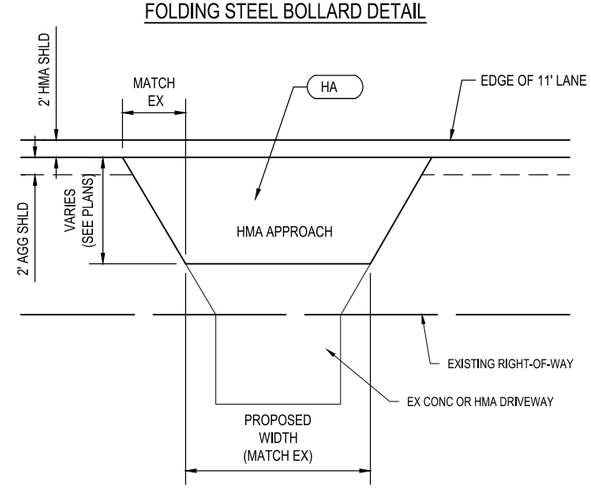

HMA DRIVEWAY DETAIL

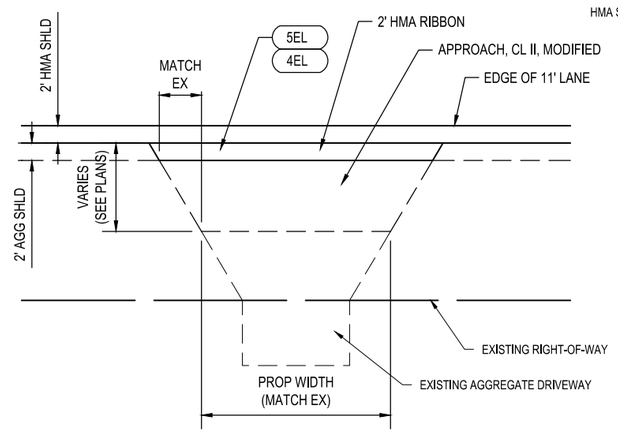

APPROACH, CL II DRIVEWAY DETAIL

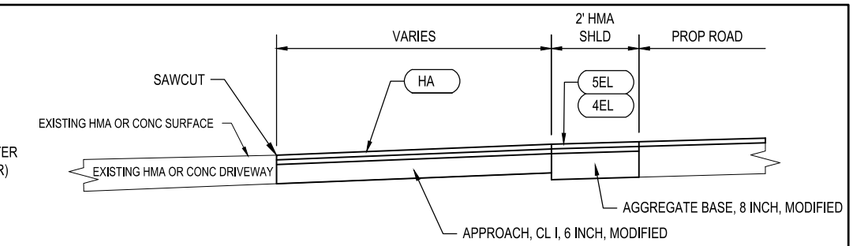

HMA / CONC DRIVEWAY REPAIR
CROSS SECTION

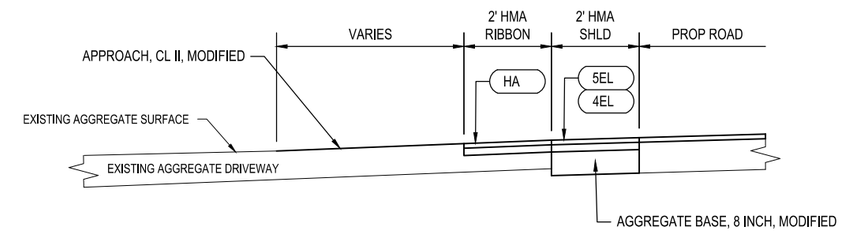

GRAVEL DRIVEWAY REPAIR
CROSS SECTION

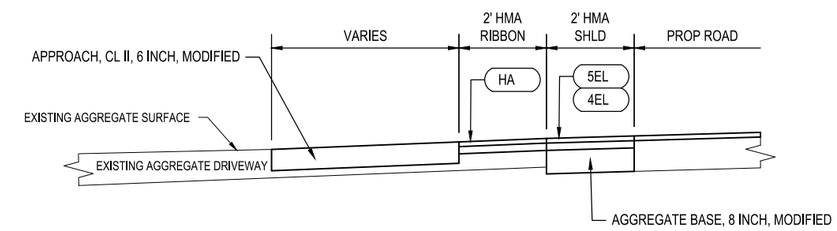

GRAVEL DRIVEWAY RECONSTRUCTION
CROSS SECTION

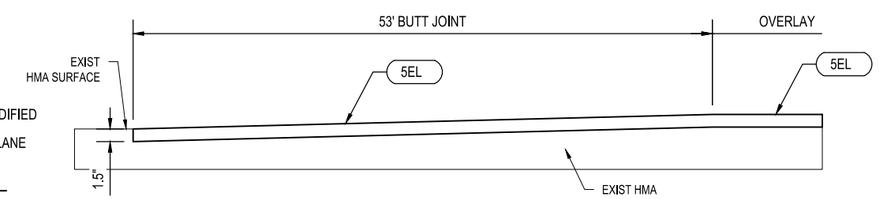

TRANSITION DETAIL

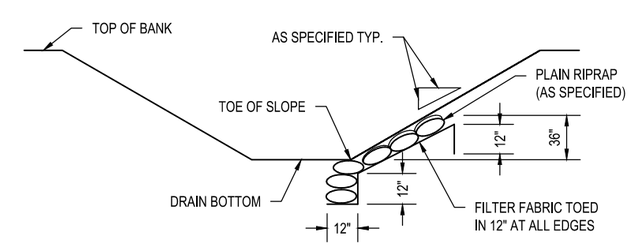

RIPRAP TOE OF SLOPE PROTECTION

10/4/2023 9:03 AM ryan.sullivan

FINAL PLAN REVISIONS			
NO.	DATE	AUTH	DESCRIPTION

SAGINAW OFFICE
230 S. Washington Ave.
Saginaw, MI 48607
Tel. 989-754-4717
Fax. 989-754-4440
www.SpicerGroup.com

VERT. (FT) 0 N/A
HORZ. (FT) 0 N/A

SGI PROJECT NO: 131018SG2021
DATE: OCTOBER, 2023
FILE: LP_DETAILS.DWG

CS: 56000
JN: 212097

MISCELLANEOUS DETAILS
BAILEY BRIDGE AT SMITHS CROSSING

DRAWING	SHEET
DETS	8

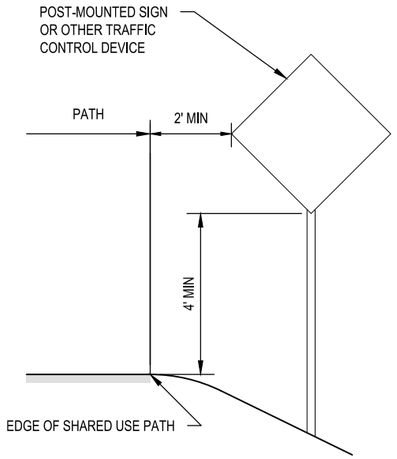

SHARED USE PATH SIGN PLACEMENT DETAIL

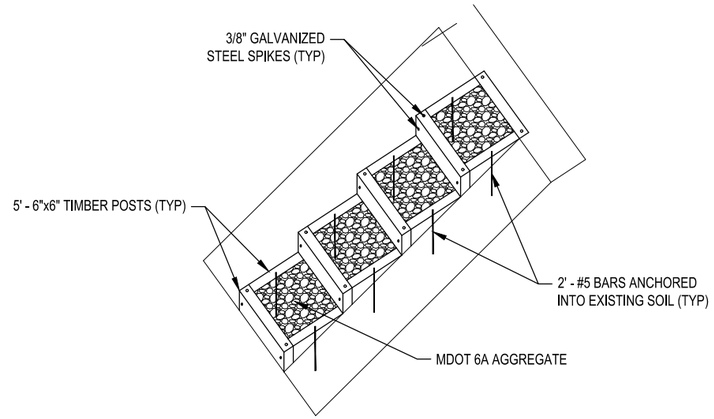

WOOD STEPS DETAIL

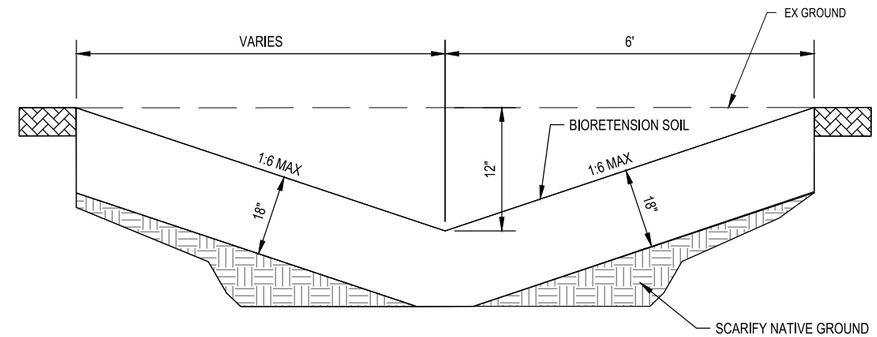

TYPICAL BIOSWALE SECTION

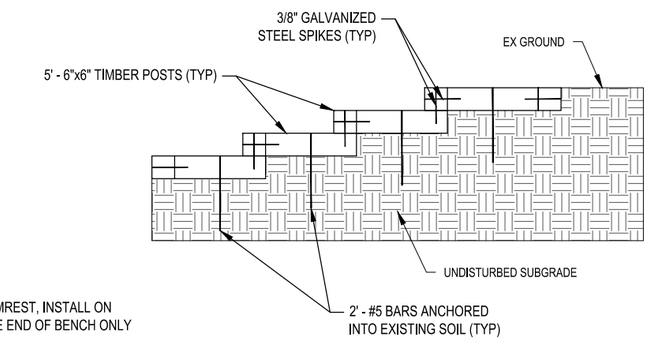

WOOD STEPS DETAIL

NOTE:
FINISH SLOPE TO PROVIDE POSITIVE DRAINAGE AND NOT TO EXCEED 2% IN ANY DIRECTION

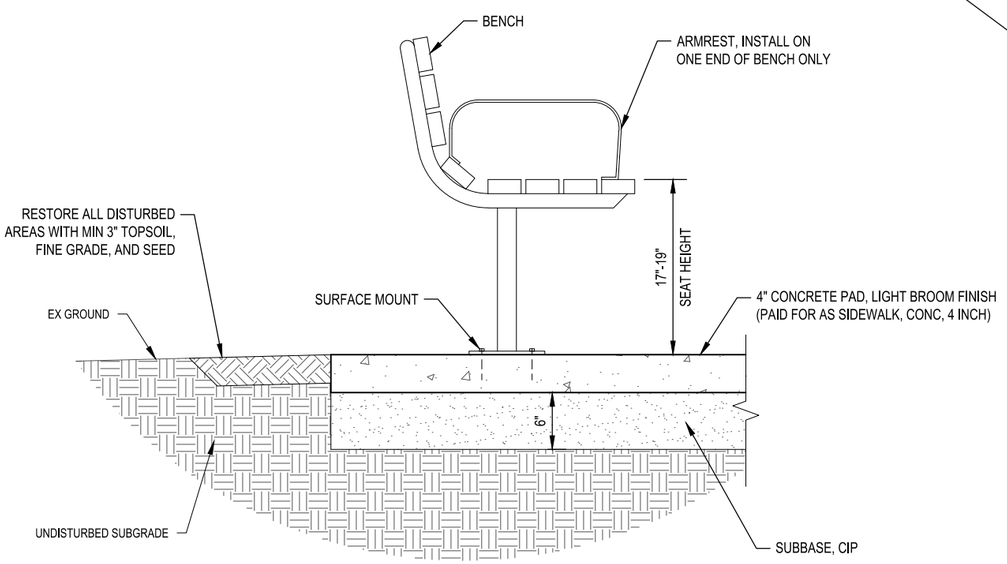

BENCH DETAIL

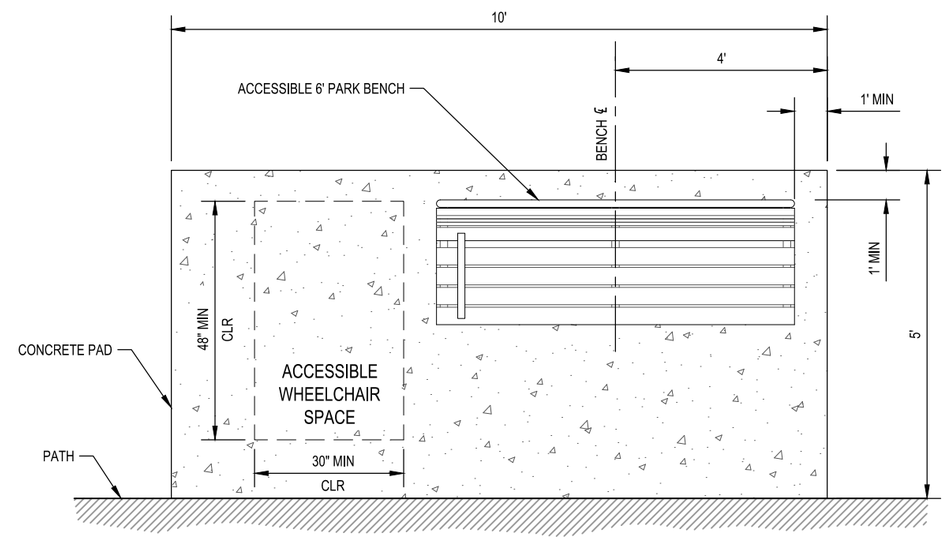

BENCH PLAN DETAIL

3/12/2024 1:51 PM ryan.robinette

FINAL PLAN REVISIONS			
NO.	DATE	AUTH	DESCRIPTION

SAGINAW OFFICE
230 S. Washington Ave.
Saginaw, MI 48607
Tel. 989-754-4717
Fax. 989-754-4440
www.SpicerGroup.com

VERT. (FT) 0 N/A
HORZ. (FT) 0 N/A

SGI PROJECT NO: 131018SG2021
DATE: MARCH, 2024
FILE: LP_DETAILS.DWG

CS: 56000
JN: 212097

MISCELLANEOUS DETAILS
BAILEY BRIDGE AT SMITHS CROSSING

DRAWING: DETS2
SHEET: 9

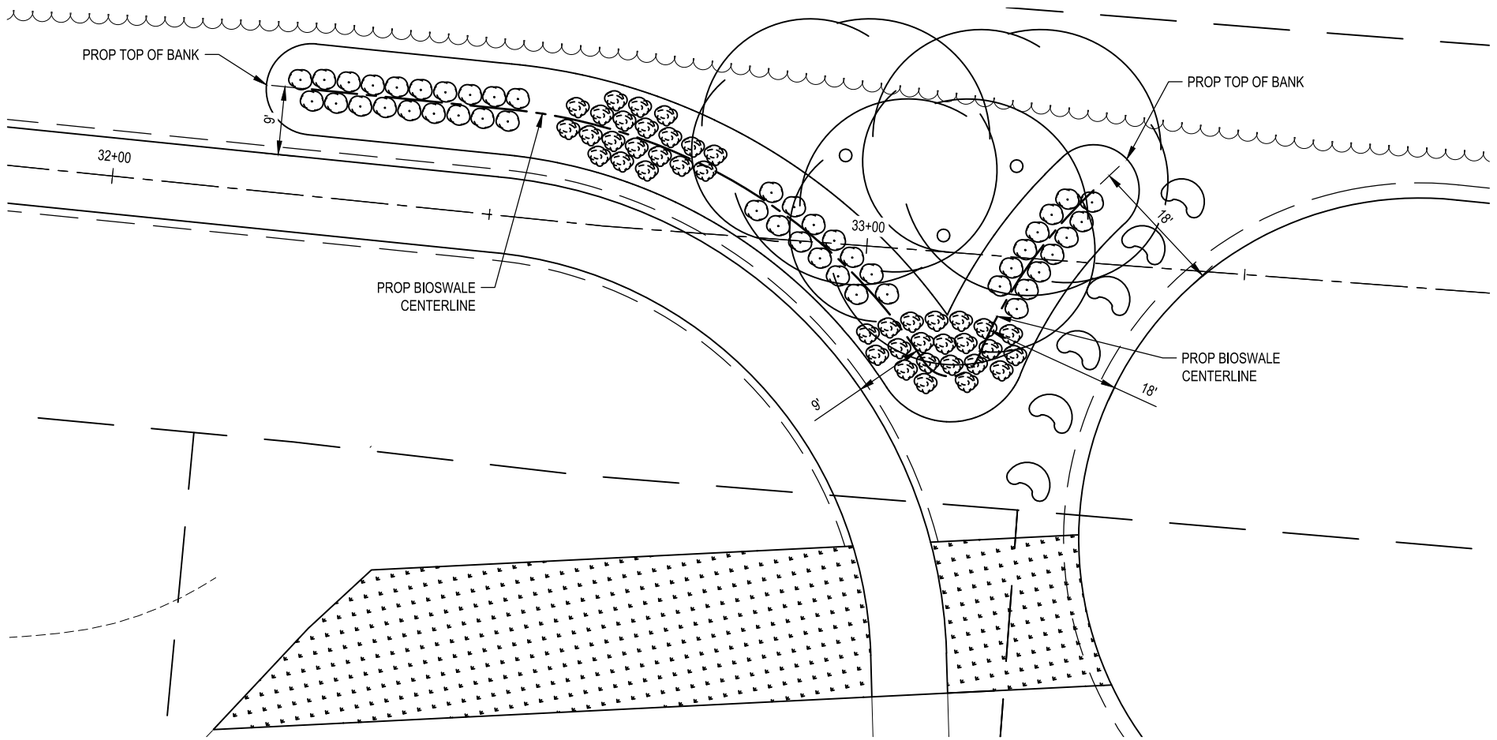

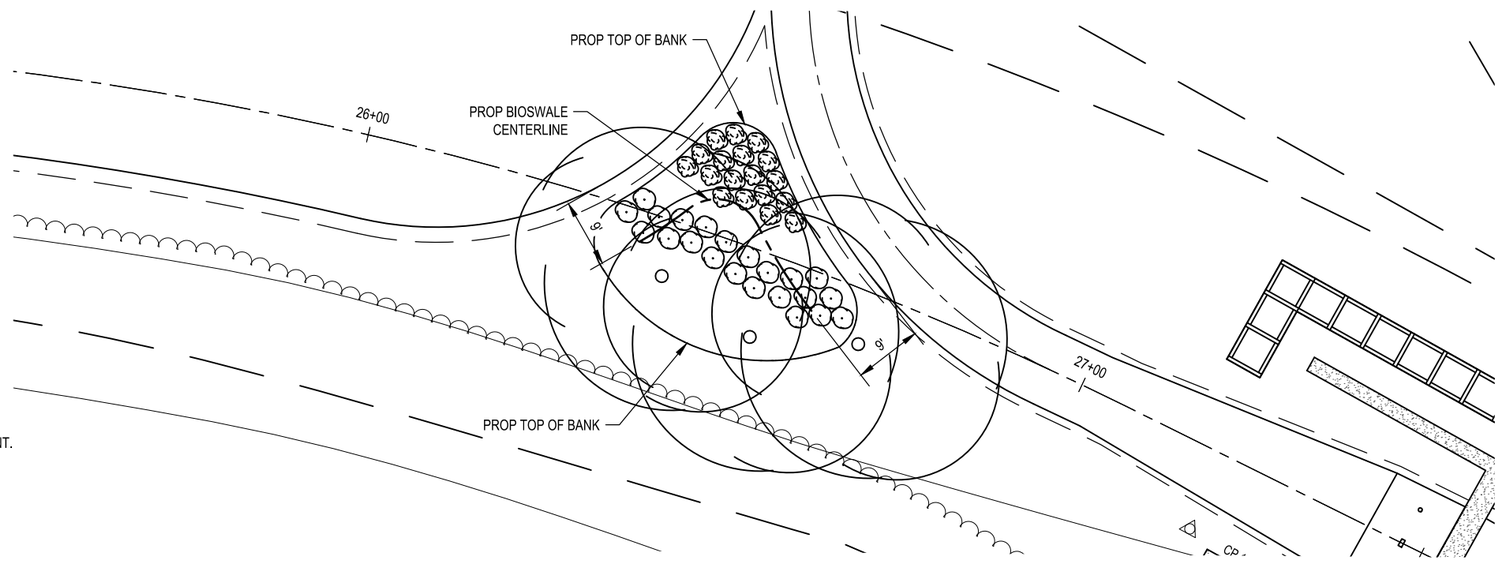

SPECIAL LEGEND

BETULA NIGRA 'HERITAGE', CLUMP FORM, 6 FOOT

SCHIZACHYRIUM SCOPARIUM 'THE BLUES', #1 CONT.

SPOROBOLUS HETEROLEPIS, #1 CONT.

MICHIGAN BOULDER, 36 INCH OR GREATER

12/11/2023 10:13 AM ryan.sullivan

FINAL PLAN REVISIONS			
NO.	DATE	AUTH	DESCRIPTION

SAGINAW OFFICE
230 S. Washington Ave.
Saginaw, MI 48607
Tel. 989-754-4717
Fax. 989-754-4440
www.SpicerGroup.com

VERT. (FT) 0 N/A
HORZ. (FT) 0 20

SGI PROJECT NO: 131018SG2021
DATE: DECEMBER, 2023
FILE: LP_DETAILS.DWG

CS: 56000
JN: 212097

MISCELLANEOUS DETAILS
BAILEY BRIDGE AT SMITHS CROSSING

DRAWING	SHEET
DETS3	10

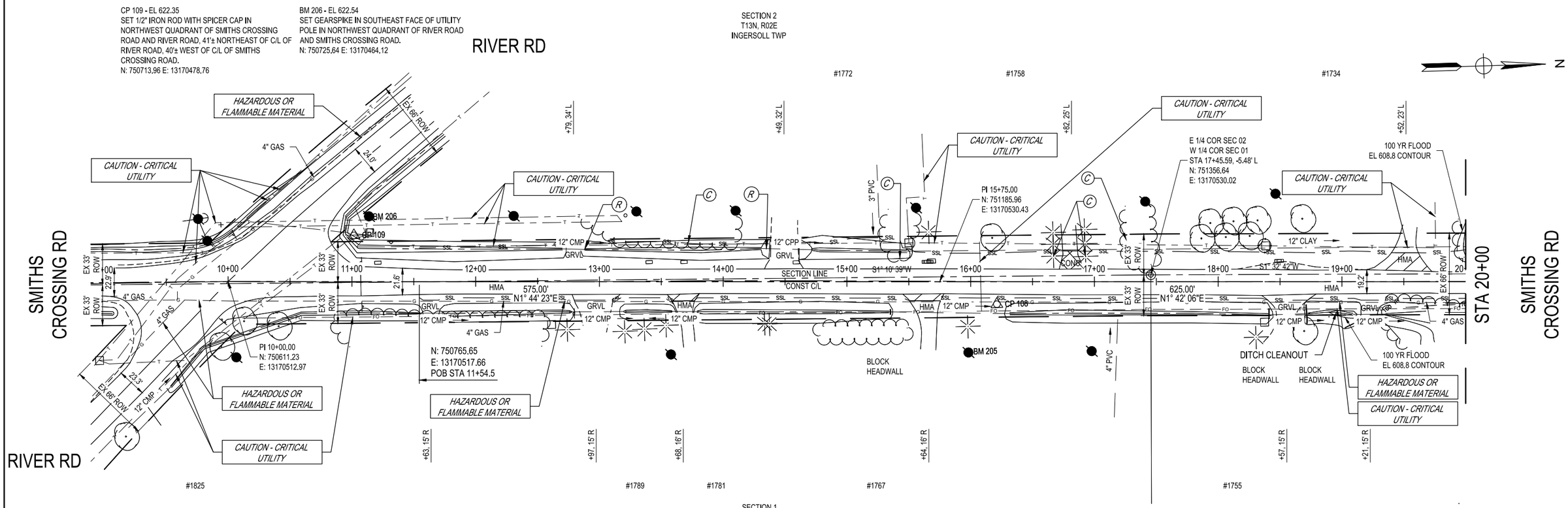

100 YEAR FLOODPLAIN ELEV 608.80 NAVD88

DRIVEWAY APPROACH QUANTITIES - THIS SHEET
(JN 212097 CAT 3)

C/L STATION	HMA Surface, Rem (Syd)
11+63 R	
12+79 L	
12+97 R	
13+68 R	14
14+49 L	
15+64 R	18
16+82 L	
18+57 R	
19+21 R	
19+52 L	
TOTAL	**32**

DRIVEWAY APPROACH QUANTITIES - THIS SHEET
(JN 212097 CAT 1)

C/L STATION	HMA Surface, Rem (Syd)	Pavt, Rem (Syd)
11+63 R		
12+79 L		
12+97 R		
13+68 R		
14+49 L		
15+64 R		
16+82 L		25
18+57 R		
19+21 R		
19+52 L	56	
TOTAL	**56**	**25**

REMOVAL QUANTITIES - THIS SHEET

JN 212097 CAT 1	JN 212097 CAT 3		
0.1		Acre	Clearing
2		Ea	Culv, Rem, Less than 24 inch
	0.4	Sta	Ditch Cleanout
	9	Sta	Trenching, Modified
846		Ft	Shared use Path, Grading

9/18/2024 12:48 PM ryan.sullivan

FINAL PLAN REVISIONS			
NO.	DATE	AUTH	DESCRIPTION

SAGINAW OFFICE
230 S. Washington Ave.
Saginaw, MI 48607
Tel. 989-754-4717
Fax. 989-754-4440
www.SpicerGroup.com

VERT. (FT) 0 N/A
HORZ. (FT) 0 80

SGI PROJECT NO: 131018SG2021
DATE: SEPTEMBER, 2024
FILE: LP_REM.DWG
CS: 56000
JN: 212097

REMOVAL
BAILEY BRIDGE AT SMITHS CROSSING
STA 11+54.5 (POB) TO STA 20+00

DRAWING	SHEET
REM1	11

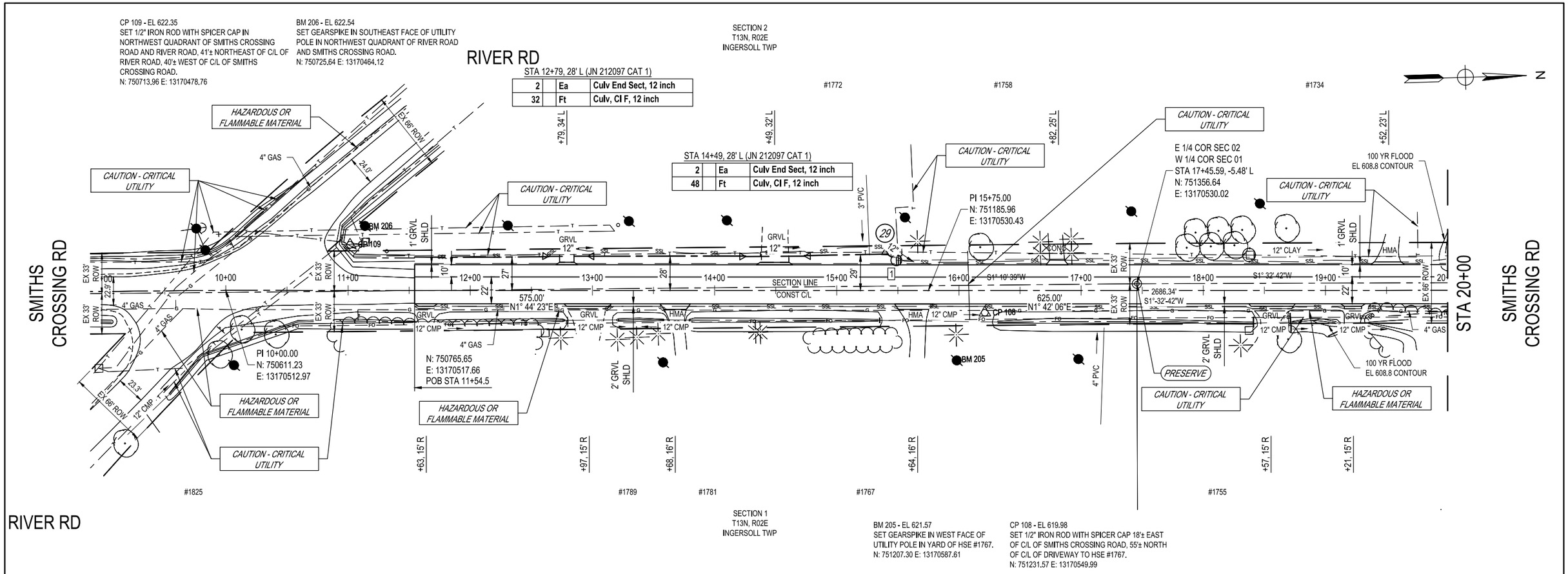

100 YEAR FLOODPLAIN ELEV 608.80 NAVD88

DRIVEWAY APPROACH QUANTITIES - THIS SHEET (JN 212097 CAT 3)

C/L STATION	HMA Approach (Ton)	Approach, Cl I, 6 inch, Modified (Syd)	Approach, Cl II, Modified (Ton)
11+63 R	1	4	1
12+79 L			
12+97 R	2	9	3
13+68 R	3	11	
14+49 L			
15+64 R	3	15	
16+82 L			
18+57 R	2	9	3
19+21 R	1	4	2
19+52 L			
TOTAL	**12**	**52**	**9**

DRIVEWAY APPROACH QUANTITIES - THIS SHEET (JN 212097 CAT 1)

C/L STATION	HMA Approach (Ton)	Approach, Cl I, 6 inch, Modified (Syd)	Approach, Cl II, Modified (Ton)
11+63 R			
12+79 L	1	4	5
12+97 R			
13+68 R			
14+49 L	2	6	8
15+64 R			
16+82 L	2	7	
18+57 R			
19+21 R			
19+52 L	2	7	
TOTAL	**7**	**24**	**13**

DRAINAGE STRUCTURE TABLE - THIS SHEET (JN 212097 CAT 1)

STR NO	Dr Structure, 48 inch dia, Modified (Ea)	Dr Structure Cover, Type DG (Ea)	Sewer, Cl A, 12 inch, Tr Det B (Ft)	Sewer, PVC, 12 inch, Tr Det B (Ft)	Sewer Tap, 12 inch (Ea)	Culv End Sect, 12 inch (Ea)
1	1	1	8	10	1	1
TOTAL	**1**	**1**	**8**	**10**	**1**	**1**

CONSTRUCTION QUANTITIES - THIS SHEET

JN 212097 CAT 1	JN 212097 CAT 3			
1			Ea	Erosion Control, Inlet Protection, Fabric Drop
	227		Syd	Aggregate Base, 8 inch
94	188		Syd	Shld, Cl II, 4 inch, Modified
	23		Ton	HMA, 4EL
	211		Ton	HMA, 5EL
233			Ton	Shared use Path, HMA
1109			Syd	Shared use Path, Aggregate, 8 inch
	1		Ea	Monument Box
	1		Ea	Monument Preservation
846			Ft	Sinusoidal Corrugations, Non-Freeway, Milled, HMA Shld

9/18/2024 1:56 PM ryan.sullivan

FINAL PLAN REVISIONS

NO.	DATE	AUTH	DESCRIPTION

SAGINAW OFFICE
230 S. Washington Ave.
Saginaw, MI 48607
Tel. 989-754-4717
Fax. 989-754-4440
www.SpicerGroup.com

VERT. (FT) 0 — N/A
HORZ. (FT) 0 — 80

SGI PROJECT NO: 131018SG2021
DATE: SEPTEMBER, 2024
FILE: LP_PLAN.DWG
CS: 56000
JN: 212097

CONSTRUCTION
BAILEY BRIDGE AT SMITHS CROSSING
STA 11+54.5 (POB) TO STA 20+00

DRAWING	SHEET
PLAN1	12

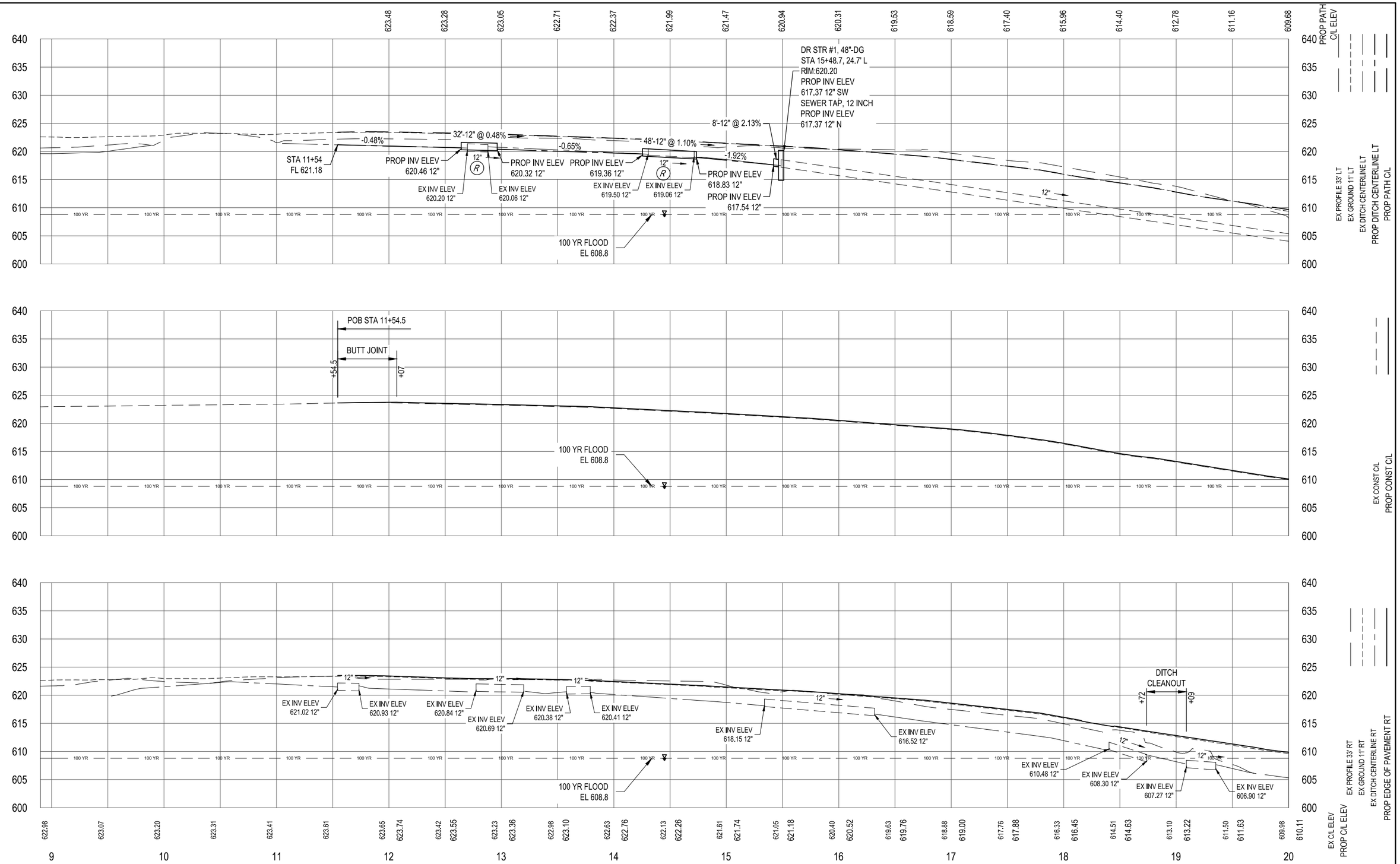

FINAL PLAN REVISIONS			
NO.	DATE	AUTH	DESCRIPTION

SAGINAW OFFICE
230 S. Washington Ave.
Saginaw, MI 48607
Tel. 989-754-47717
Fax. 989-754-4440
www.SpicerGroup.com

VERT. (FT) 0 16
HORZ. (FT) 0 80

SGI PROJECT NO: 131018SG2021
DATE: SEPTEMBER, 2024
FILE: LP_PROF.DWG

CS: 56000
JN: 212097

PROFILE
BAILEY BRIDGE AT SMITHS CROSSING
STA 11+54.5 (POB) TO STA 20+00

DRAWING	SHEET
PROF1	13

9/19/2024 11:37 AM ryan.sullivan

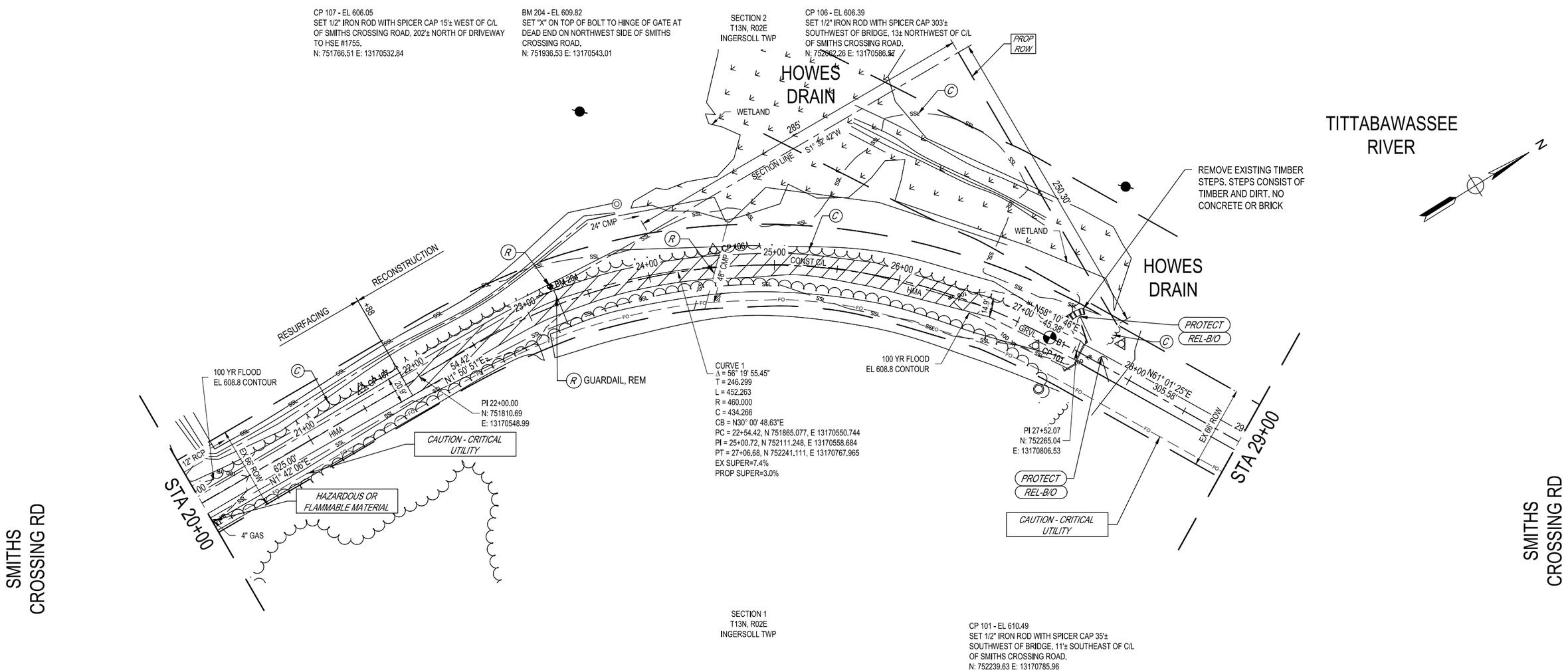

SECTION 1
T13N, R02E
INGERSOLL TWP

CP 101 - EL 610.49
SET 1/2" IRON ROD WITH SPICER CAP 35'± SOUTHWEST OF BRIDGE, 11'± SOUTHEAST OF C/L OF SMITHS CROSSING ROAD.
N: 752239.63 E: 13170785.96

TITTABAWASSEE RIVER

REMOVAL QUANTITIES - THIS SHEET

JN 212097	JN 212097		
CAT 1	CAT 3		
1.0		Acre	Clearing
1		Ea	Culv, Rem, 24 inch to 48 inch
30		Ft	Guardrail, Rem
2210		Cyd	Non Haz Contaminated Material Handling and Disposal, LM
5		Sta	Machine Grading, Modified
	2	Sta	Trenching, Modified
1060		Syd	HMA Surface, Rem
838		Ft	Shared use Path, Grading

100 YEAR
FLOODPLAIN ELEV
608.80 NAVD88

9/18/2024 12:48 PM ryan.sullivan

FINAL PLAN REVISIONS			
NO.	DATE	AUTH	DESCRIPTION

SAGINAW OFFICE
230 S. Washington Ave.
Saginaw, MI 48607
Tel. 989-754-4717
Fax. 989-754-4440
www.SpicerGroup.com

VERT. (FT) 0 N/A
HORZ. (FT) 0 80

SGI PROJECT NO: 131018SG2021
DATE: SEPTEMBER, 2024
FILE: LP_REM.DWG
CS: 56000
JN: 212097

REMOVAL
BAILEY BRIDGE AT SMITHS CROSSING
STA 20+00 TO STA 29+00

DRAWING: REM2
SHEET: 14

CP 107 - EL 606.05
SET 1/2" IRON ROD WITH SPICER CAP 15'± WEST OF C/L OF SMITHS CROSSING ROAD, 202'± NORTH OF DRIVEWAY TO HSE #1755.
N: 751766.51 E: 13170532.84

BM 204 - EL 609.82
SET "X" ON TOP OF BOLT TO HINGE OF GATE AT DEAD END ON NORTHWEST SIDE OF SMITHS CROSSING ROAD.
N: 751936.53 E: 13170543.01

SECTION 2
T13N, R02E
INGERSOLL TWP

CP 106 - EL 606.39
SET 1/2" IRON ROD WITH SPICER CAP 303'± SOUTHWEST OF BRIDGE, 13± NORTHWEST OF C/L OF SMITHS CROSSING ROAD.
N: 752062.26 E: 13170586.57

CUT AND FILL VOLUMES IN WETLAND TABLE			
	AVERAGE AREA (SFT)	AVERAGE VOLUME (CFT)	AVERAGE VOLUME (CYD)
FILL - EMBANKMENT	4856.6	33336.9	1233.3
FILL - HOT MIX ASPHALT	1699.2*	496.8	18.4
FILL - SHOULDER	126.0*	37.8	1.4
FILL - AGGREGATE BASE	1790.5	1198.8	44.4
FILL - SAND SUBBASE	938.7*	1031.4	38.2
SUBTOTAL FILL	6647.1	36063.9	**1335.7**
CUT	6647.1	3029.4	**112.2**
NET VOLUME	**NET VOLUME = 1223.5 CYD FILL**		

*OVERLAPPING AREA (NOT INCLUDED IN SUM FILL AREA)

CUT AND FILL VOLUMES BELOW FLOODPLAIN TABLE			
	AVERAGE AREA (SFT)	AVERAGE VOLUME (CFT)	AVERAGE VOLUME (CYD)
FILL - EMBANKMENT	18715.5	75343.5	2790.5
FILL - HOT MIX ASPHALT	26940.7	7857.0	291.0
FILL - AGGREGATE BASE	24437.8*	16372.8	606.4
FILL - SAND SUBBASE	8544.0*	9398.7	348.1
SUBTOTAL FILL	45656.2	108972.0	**4036.0**
CUT	45656.2	59659.2	**2209.6**
NET VOLUME	**NET VOLUME = 1826.4 CYD FILL**		

*OVERLAPPING AREA (NOT INCLUDED IN SUM FILL AREA)

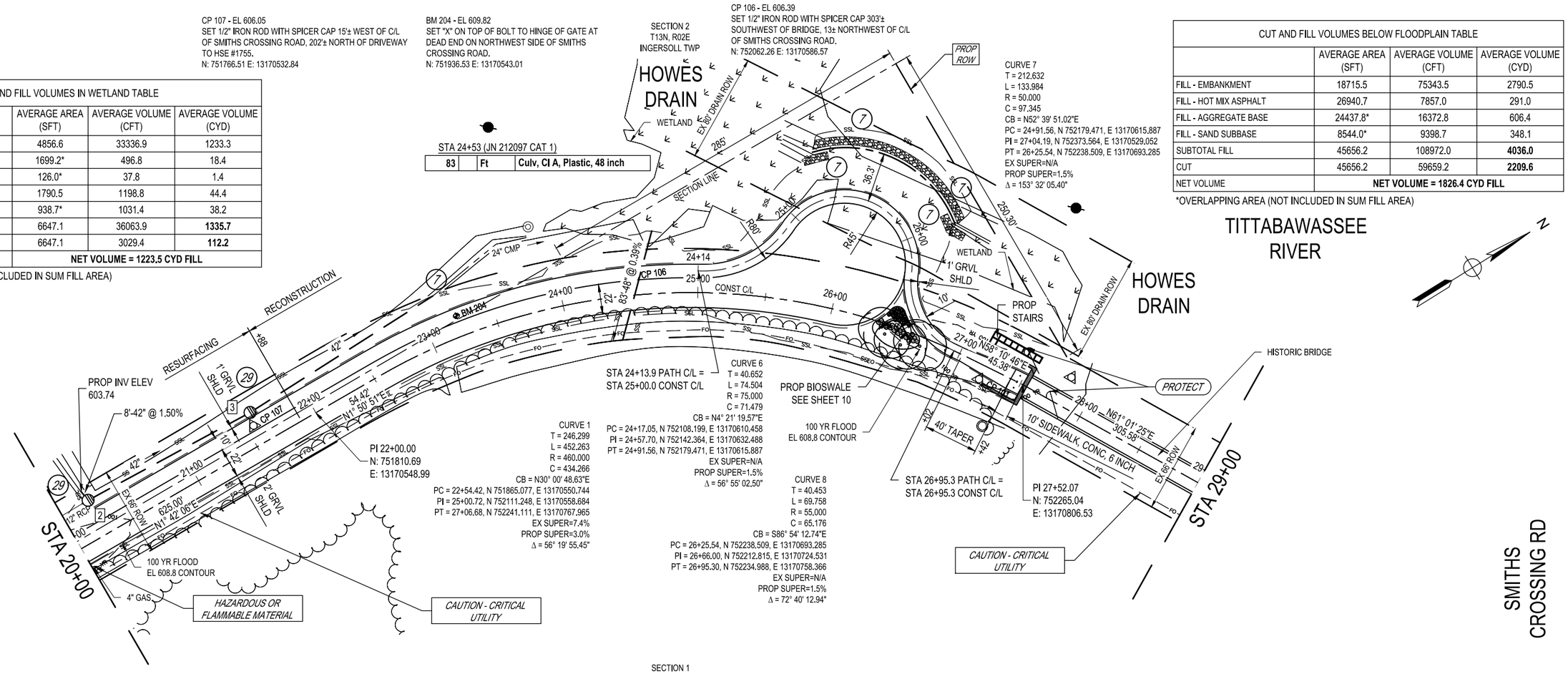

SECTION 1
T13N, R02E
INGERSOLL TWP

CP 101 - EL 610.49
SET 1/2" IRON ROD WITH SPICER CAP 35'± SOUTHWEST OF BRIDGE, 11'± SOUTHEAST OF C/L OF SMITHS CROSSING ROAD.
N: 752239.63 E: 13170785.96

TITTABAWASSEE RIVER

DRAINAGE STRUCTURE TABLE - THIS SHEET (JN 212097 CAT 1)

STR NO	Dr Structure, 72 inch dia, Modified (Ea)	Dr Structure, 96 inch dia, Modified (Ea)	Dr Structure Cover, Type DG (Ea)	Sewer, CI A, 12 inch, Tr Det B (Ft)	Sewer, CI A, 42 inch, Tr Det B (Ft)	Sewer Tap, 12 inch (Ea)
2		1	1	5	144	1
3	1		1		160	
TOTAL	**1**	**1**	**2**	**5**	**304**	**1**

SPECIAL LEGEND

BETULA NIGRA 'HERITAGE', CLUMP FORM, 6 FOOT

SCHIZACHYRIUM SCOPARIUM 'THE BLUES', #1 CONT.

SPOROBOLUS HETEROLEPIS, #1 CONT.

100 YEAR FLOODPLAIN ELEV 608.80 NAVD88

CONSTRUCTION QUANTITIES - THIS SHEET

JN 212097 CAT 1	JN 212097 CAT 3			
2			Ea	Erosion Control, Inlet Protection, Fabric Drop
349			Cyd	Subbase, CIP
950	841		Syd	Aggregate Base, 8 inch
144	112		Syd	Shld, CI II, 4 inch, Modified
119	102		Ton	HMA, 4EL
90	120		Ton	HMA, 5EL
160			Sft	Sidewalk, Conc, 6 inch
250			Sft	Steps, Wood and Aggregate
234			Ton	Shared use Path, HMA
19			Syd	Shared use Path, Aggregate, 6 inch
1114			Syd	Shared use Path, Aggregate, 8 inch
161			Syd	Riprap, Plain
3			Ea	Betula nigra 'Heritage', clump form, 6 foot
18			Ea	Schizachyrium scoparium 'The Blues', #1 cont.
22			Ea	Sporobolus heterolepis, #1 cont.
81			Cyd	Bioretension Soil
1			Ea	Bollard System

11/12/2024 4:28 PM garrett.everitt

FINAL PLAN REVISIONS			
NO.	DATE	AUTH	DESCRIPTION

Spicer group
SAGINAW OFFICE
230 S. Washington Ave.
Saginaw, MI 48607
Tel. 989-754-4717
Fax. 989-754-4440
www.SpicerGroup.com

VERT. (FT) 0 N/A
HORZ. (FT) 0 80

SGI PROJECT NO: 131018SG2021
DATE: NOVEMBER, 2024
FILE: LP_PLAN.DWG
CS: 56000
JN: 212097

CONSTRUCTION
BAILEY BRIDGE AT SMITHS CROSSING
STA 20+00 TO STA 29+00

DRAWING: PLAN2
SHEET: 15

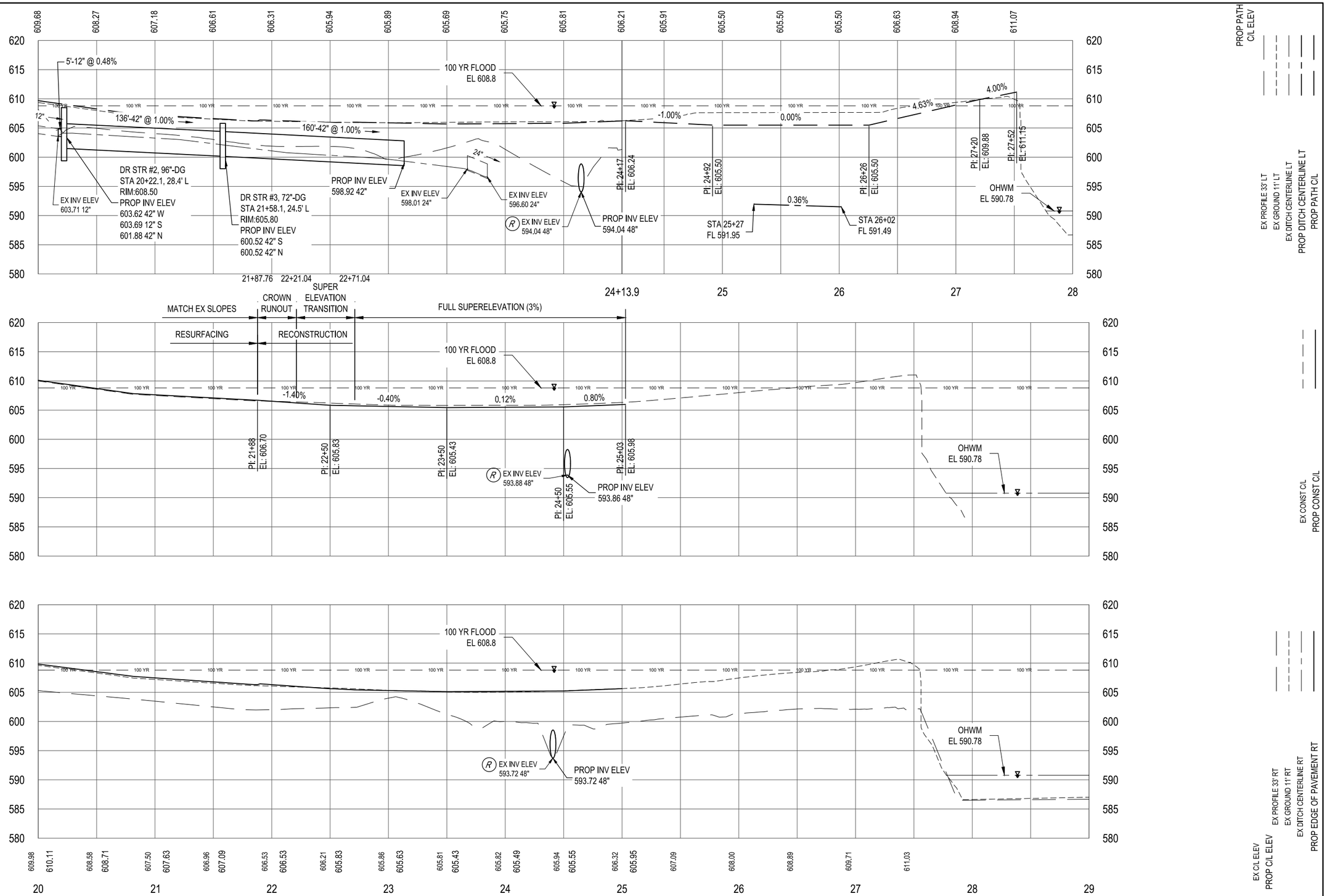

11/3/2023 8:39 AM ryan.sullivan

FINAL PLAN REVISIONS			
NO.	DATE	AUTH	DESCRIPTION

SAGINAW OFFICE
230 S. Washington Ave.
Saginaw, MI 48607
Tel. 989-754-47117
Fax. 989-754-4440
www.SpicerGroup.com

VERT. (FT) 0 16
HORZ. (FT) 0 80

SGI PROJECT NO: 131018SG2021
DATE: NOVEMBER, 2023
FILE: LP_PROF.DWG

CS: 56000
JN: 212097

PROFILE
BAILEY BRIDGE AT SMITHS CROSSING
STA 20+00 TO STA 29+00

DRAWING	SHEET
PROF2	16

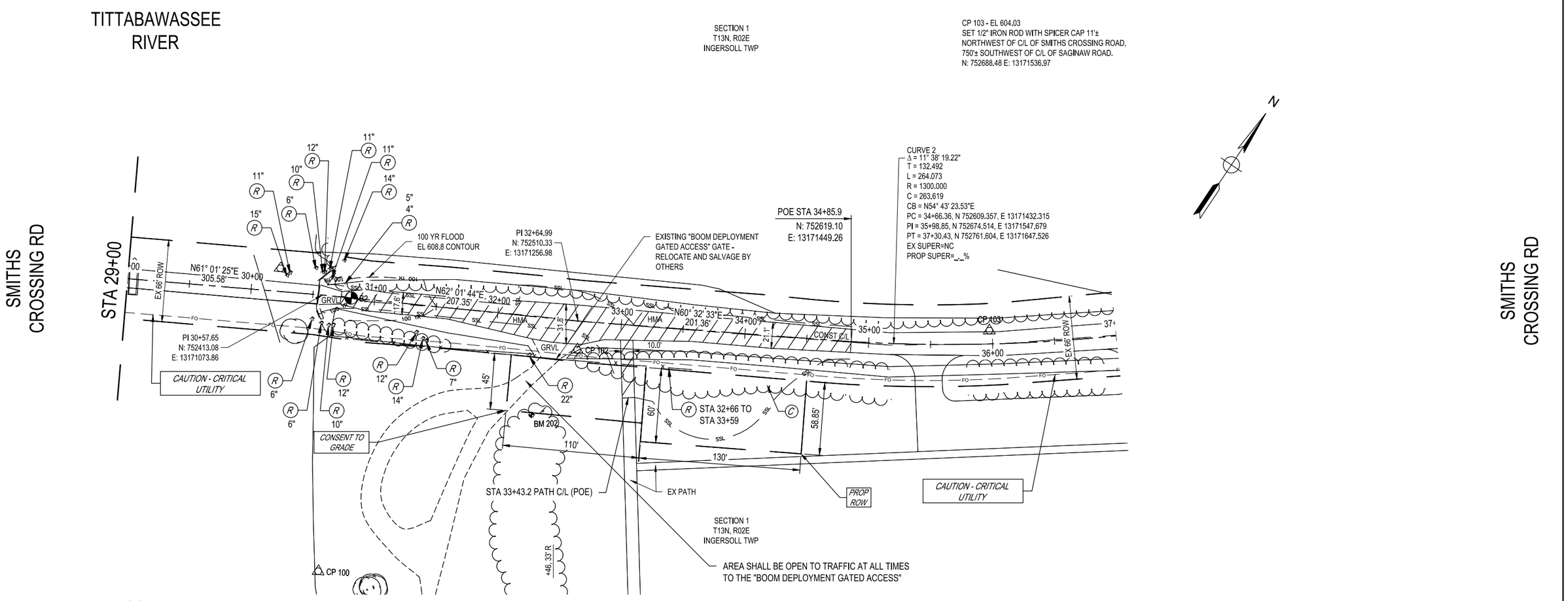

CP 100 - EL 600.63
SET 1/2" IRON ROD WITH SPICER CAP 3'± EAST OF TOP OF BANK OF RIVER, 223'± SOUTH OF C/L OF BRIDGE.
N: 752225.90 E: 13171195.09

BM 202 - EL 603.82
SET GEARSPIKE IN WEST FACE OF 12" MAPLE, 47'± SOUTHEAST OF GATE FROM SMITHS CROSSING ROAD TO DOW PROPERTY, EAST OF GRAVEL DRIVE.
N: 752426.57 E: 13171267.80

CP 102 - EL 605.24
SET 1/2" IRON ROD WITH SPICER CAP 23'± SOUTHEAST OF C/L OF SMITHS CROSSING ROAD, 18'± EAST OF C/L OF DRIVEWAY TO DOW'S PROPERTY.
N: 752490.75 E: 13171269.20

100 YEAR FLOODPLAIN ELEV 608.80 NAVD88

REMOVAL QUANTITIES - THIS SHEET

JN 212097			
CAT 1			
0.2		**Acre**	**Clearing**
1		**Ea**	**Stump, Rem, 19 inch to 36 inch**
17		**Ea**	**Stump, Rem, 6 inch to 18 inch**
93		**Ft**	**Fence, Rem**
332		**Cyd**	**Non Haz Contaminated Material Handling and Disposal, LM**
2		**Sta**	**Machine Grading, Modified**
1075		**Syd**	**HMA Surface, Rem**
285		**Ft**	**Shared use Path, Grading**

3/22/2024 12:50 PM ryan.sullivan

FINAL PLAN REVISIONS			
NO.	DATE	AUTH	DESCRIPTION

SAGINAW OFFICE
230 S. Washington Ave.
Saginaw, MI 48607
Tel. 989-754-4717
Fax. 989-754-4440
www.SpicerGroup.com

VERT. (FT) 0 N/A
HORZ. (FT) 0 80

SGI PROJECT NO: 131018SG2021
DATE: MARCH, 2024
FILE: LP_REM.DWG
CS: 56000
JN: 212097

REMOVAL
BAILEY BRIDGE AT SMITHS CROSSING
STA 29+00 TO STA 34+85.9 (POE)

DRAWING REM3
SHEET 17

TITTABAWASSEE RIVER

SECTION 1
T13N, R02E
INGERSOLL TWP

CP 103 - EL 604.03
SET 1/2" IRON ROD WITH SPICER CAP 11'±
NORTHWEST OF C/L OF SMITHS CROSSING ROAD,
750'± SOUTHWEST OF C/L OF SAGINAW ROAD.
N: 752688.48 E: 13171536.97

CUT AND FILL VOLUMES BELOW FLOODPLAIN TABLE			
	AVERAGE AREA (SFT)	AVERAGE VOLUME (CFT)	AVERAGE VOLUME (CYD)
FILL - EMBANKMENT	4313.4	12660.3	468.9
FILL - HOT MIX ASPHALT	10677.1*	3113.1	115.3
FILL - AGGREGATE BASE	11049.8	7403.4	274.2
FILL - SAND SUBBASE	8887.5*	9776.7	362.1
SUBTOTAL FILL	15363.2	32953.5	**1220.5**
CUT	15363.2	8958.6	**331.8**
NET VOLUME	**NET VOLUME = 888.7 CYD FILL**		

*OVERLAPPING AREA (NOT INCLUDED IN SUM FILL AREA)

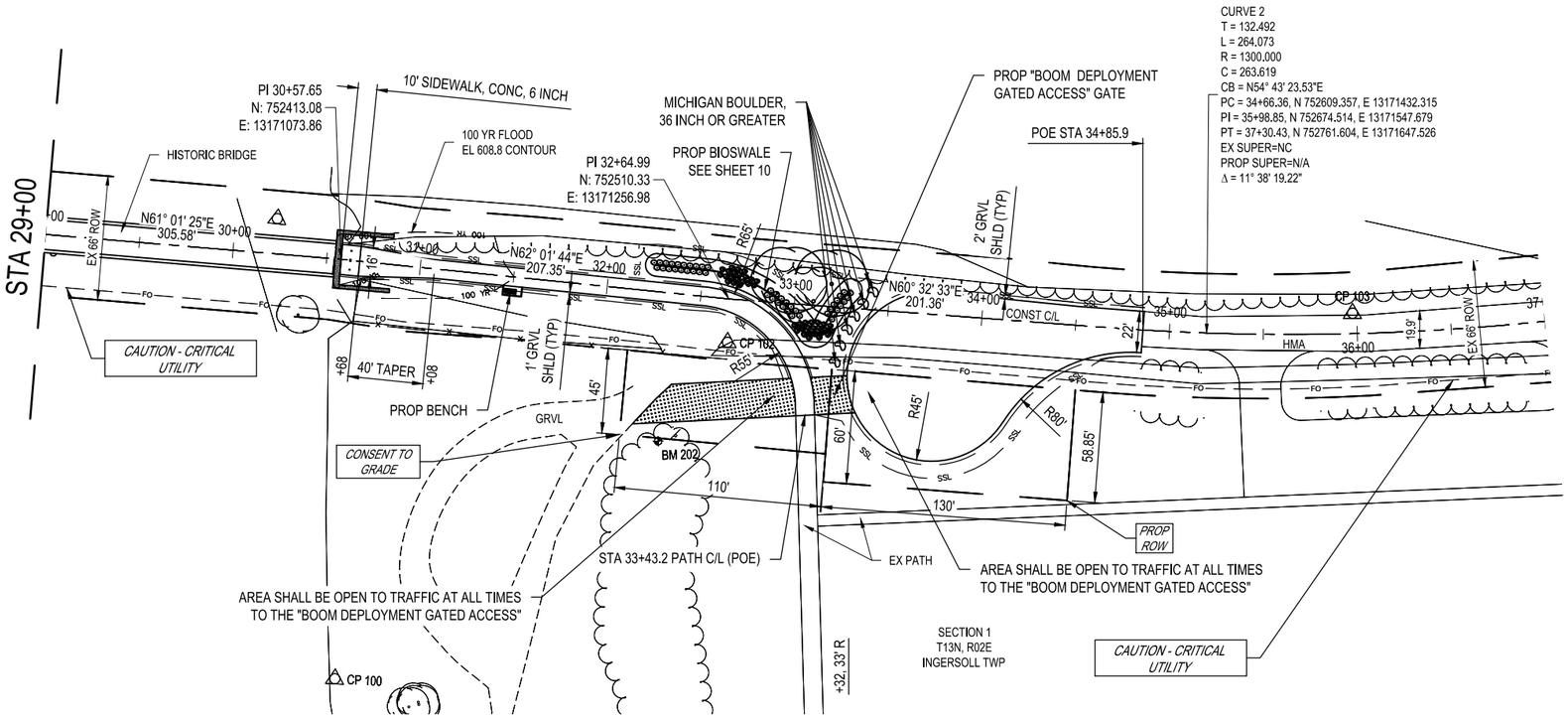

TITTABAWASSEE RIVER

CP 100 - EL 600.63
SET 1/2" IRON ROD WITH SPICER CAP 3'± EAST OF
TOP OF BANK OF RIVER, 223'± SOUTH OF C/L OF
BRIDGE.
N: 752225.90 E: 13171195.09

BM 202 - EL 603.82
SET GEARSPIKE IN WEST FACE OF 12" MAPLE, 47'±
SOUTHEAST OF GATE FROM SMITHS CROSSING
ROAD TO DOW PROPERTY, EAST OF GRAVEL DRIVE.
N: 752426.57 E: 13171267.80

CP 102 - EL 605.24
SET 1/2" IRON ROD WITH SPICER CAP 23'±
SOUTHEAST OF C/L OF SMITHS CROSSING ROAD, 18'±
EAST OF C/L OF DRIVEWAY TO DOW'S PROPERTY.
N: 752490.75 E: 13171269.20

100 YEAR FLOODPLAIN ELEV 608.80 NAVD88

SPECIAL LEGEND

BETULA NIGRA 'HERITAGE', CLUMP FORM, 6 FOOT

SCHIZACHYRIUM SCOPARIUM 'THE BLUES', #1 CONT.

SPOROBOLUS HETEROLEPIS, #1 CONT.

DRIVEWAY APPROACH QUANTITIES - THIS SHEET
(JN 212097 CAT 1)

C/L STATION	HMA Approach (Ton)	Approach, CI I, 6 inch, Modified (Syd)
33+32 R	43	213
TOTAL	**43**	**213**

CONSTRUCTION QUANTITIES - THIS SHEET

JN 212097			
CAT 1			
365		Cyd	Subbase, CIP
988		Syd	Aggregate Base, 8 inch
154		Syd	Shld, CI II, 4 inch, Modified
124		Ton	HMA, 4EL
93		Ton	HMA, 5EL
50		Sft	Sidewalk, Conc, 4 inch
160		Sft	Sidewalk, Conc, 6 inch
70		Ton	Shared use Path, HMA
19		Syd	Shared use Path, Aggregate, 6 inch
349		Syd	Shared use Path, Aggregate, 8 inch
3		Ea	Betula nigra 'Heritage', clump form, 6 foot
41		Ea	Schizachyrium scoparium 'The Blues', #1 cont.
45		Ea	Sporobolus heterolepis, #1 cont.
6		Ea	Michigan Boulder, 36 inch or greater
38		Cyd	Bioretension Soil
1		Ea	Bench
1		Ea	Bollard System

11/12/2024 4:32 PM garrett.everitt

FINAL PLAN REVISIONS			
NO.	DATE	AUTH	DESCRIPTION

SAGINAW OFFICE
230 S. Washington Ave.
Saginaw, MI 48607
Tel. 989-754-4717
Fax. 989-754-4440
www.SpicerGroup.com

VERT. (FT) 0 N/A
HORZ. (FT) 0 80

SGI PROJECT NO: 131018SG2021
DATE: NOVEMBER, 2024
FILE: LP_PLAN.DWG
CS: 56000
JN: 212097

CONSTRUCTION
BAILEY BRIDGE AT SMITHS CROSSING
STA 29+00 TO STA 34+85.9 (POE)

DRAWING: PLAN3
SHEET: 18

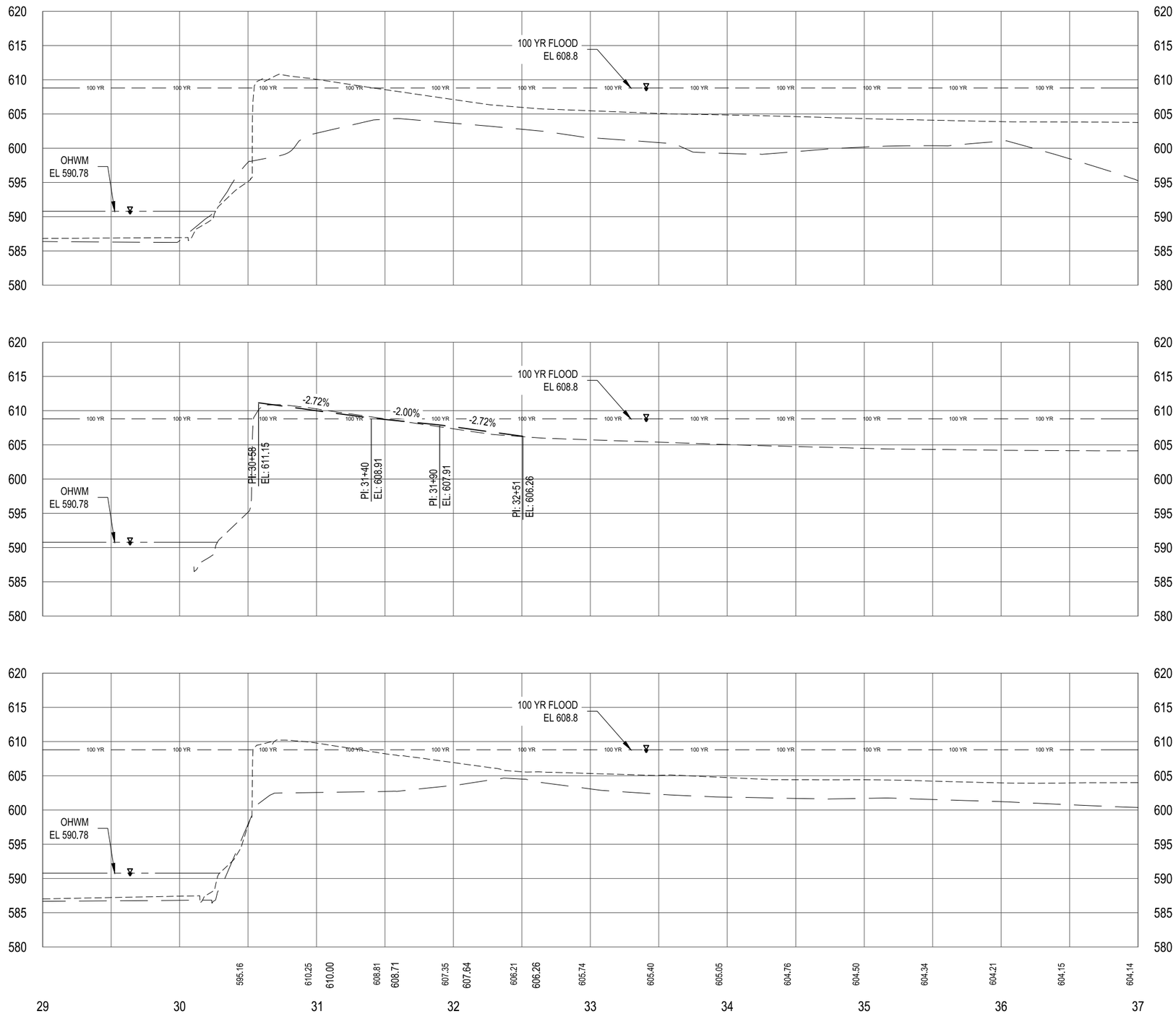

EX PROFILE 33' LT
EX GROUND 11' LT
EX DITCH CENTERLINE LT
PROP EDGE OF PAVEMENT LT

EX CONST C/L
PROP PATH C/L

EX PROFILE 33' RT
EX GROUND 11' RT
EX DITCH CENTERLINE RT
PROP EDGE OF PAVEMENT RT

EX C/L ELEV
PROP PATH C/L ELEV

11/3/2023 8:39 AM ryan.sullivan

FINAL PLAN REVISIONS			
NO.	DATE	AUTH	DESCRIPTION

SAGINAW OFFICE
230 S. Washington Ave.
Saginaw, MI 48607
Tel. 989-754-4717
Fax. 989-754-4440
www.SpicerGroup.com

VERT. (FT) 0 16
HORZ. (FT) 0 80

SGI PROJECT NO: 131018SG2021
DATE: NOVEMBER, 2023
FILE: LP_PROF.DWG

CS: 56000
JN: 212097

PROFILE
BAILEY BRIDGE AT SMITHS CROSSING
STA 29+00 TO STA 34+85.9 (POE)

DRAWING: PROF3
SHEET: 19

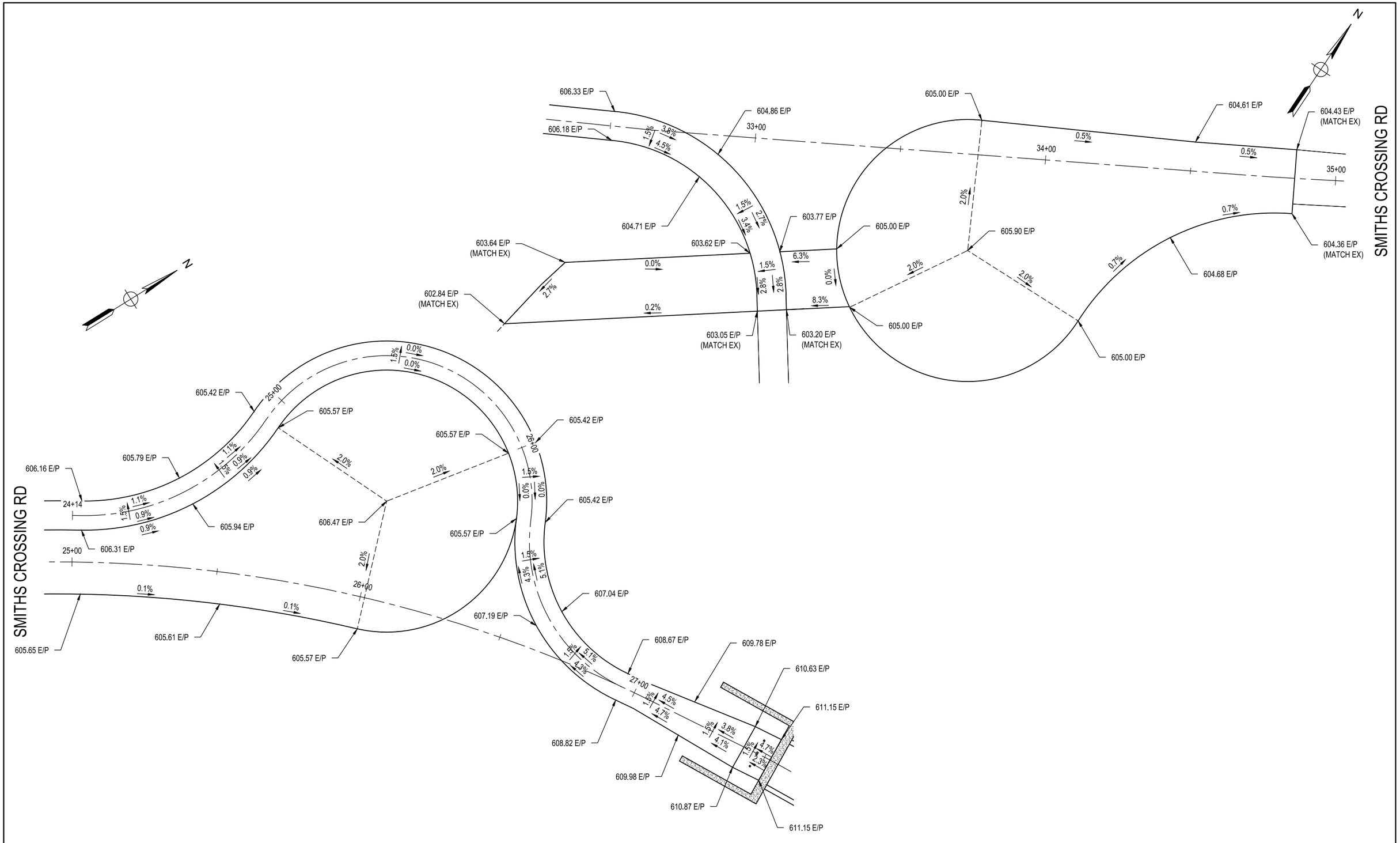

FINAL PLAN REVISIONS			
NO.	DATE	AUTH	DESCRIPTION

SAGINAW OFFICE
230 S. Washington Ave.
Saginaw, MI 48607
Tel. 989-754-4717
Fax. 989-754-4440
www.SpicerGroup.com

VERT. (FT) 0 N/A
HORZ. (FT) 0 30

SGI PROJECT NO: 131018SG2021
DATE: DECEMBER, 2024
FILE: LP_GRD.DWG

CS: 56000
JN: 212097

DETAIL GRADES
BAILEY BRIDGE AT SMITHS CROSSING

DRAWING	SHEET
GRD	20

12/20/2024 8:24 AM garrett.everitt

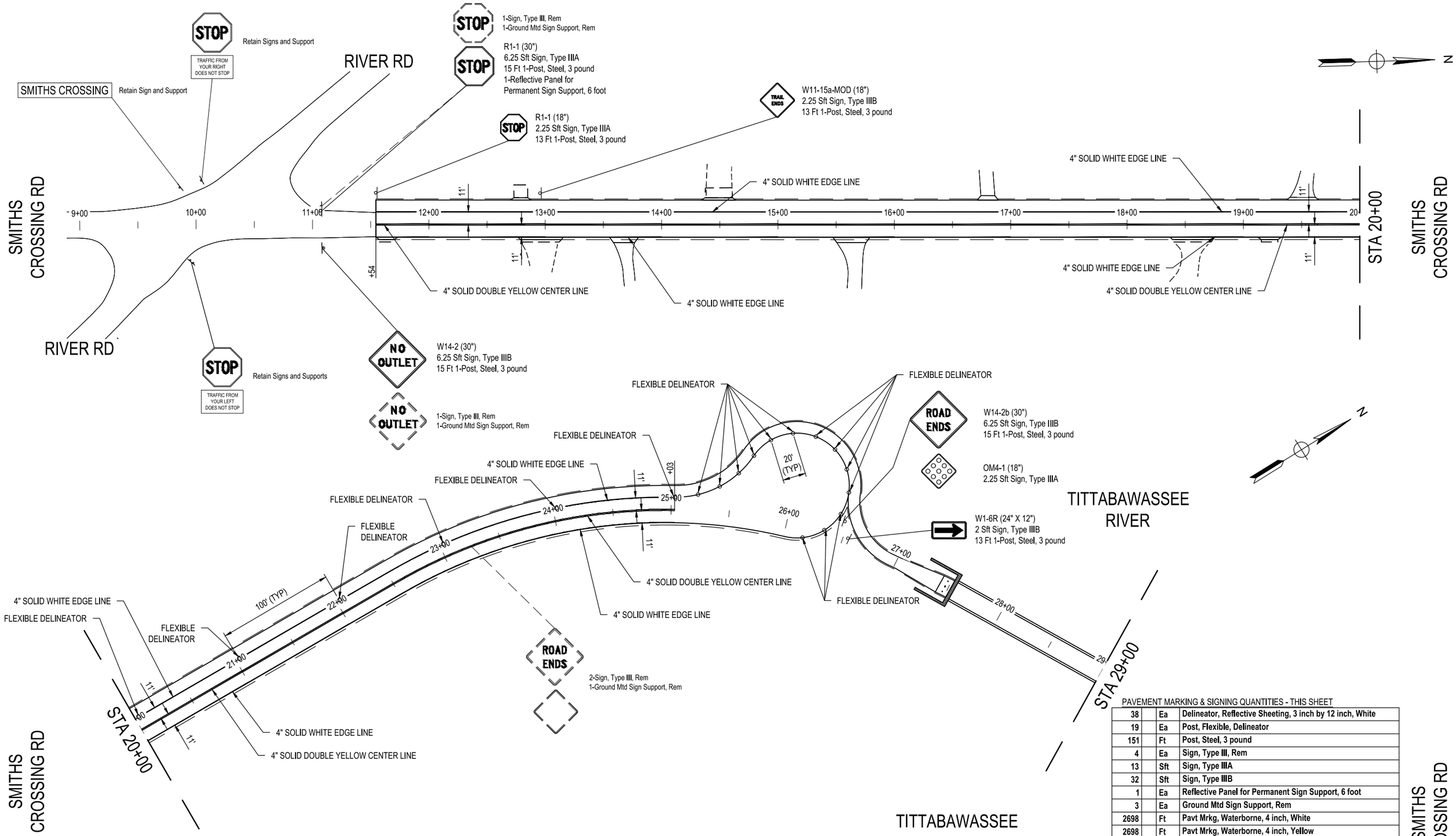

PAVEMENT MARKING & SIGNING QUANTITIES - THIS SHEET

38	Ea	Delineator, Reflective Sheeting, 3 inch by 12 inch, White
19	Ea	Post, Flexible, Delineator
151	Ft	Post, Steel, 3 pound
4	Ea	Sign, Type III, Rem
13	Sft	Sign, Type IIIA
32	Sft	Sign, Type IIIB
1	Ea	Reflective Panel for Permanent Sign Support, 6 foot
3	Ea	Ground Mtd Sign Support, Rem
2698	Ft	Pavt Mrkg, Waterborne, 4 inch, White
2698	Ft	Pavt Mrkg, Waterborne, 4 inch, Yellow
2698	Ft	Pavt Mrkg, Waterborne, 2nd Application, 4 inch, White
2698	Ft	Pavt Mrkg, Waterborne, 2nd Application, 4 inch, Yellow

FINAL PLAN REVISIONS

NO.	DATE	AUTH	DESCRIPTION

SAGINAW OFFICE
230 S. Washington Ave.
Saginaw, MI 48607
Tel. 989-754-4717
Fax. 989-754-4440
www.SpicerGroup.com

VERT. (FT) 0 N/A
HORZ. (FT) 0 80

SGI PROJECT NO: 131018SG2021
DATE: DECEMBER, 2024
FILE: LP_SIGN.DWG

CS: 56000
JN: 212097

PERMANENT PAVEMENT MARKING & SIGNING
BAILEY BRIDGE AT SMITHS CROSSING
STA 11+54.5 (POB) TO STA 29+00

DRAWING: SIGN1
SHEET: 21

12/20/2024 3:15 PM ryan.sullivan

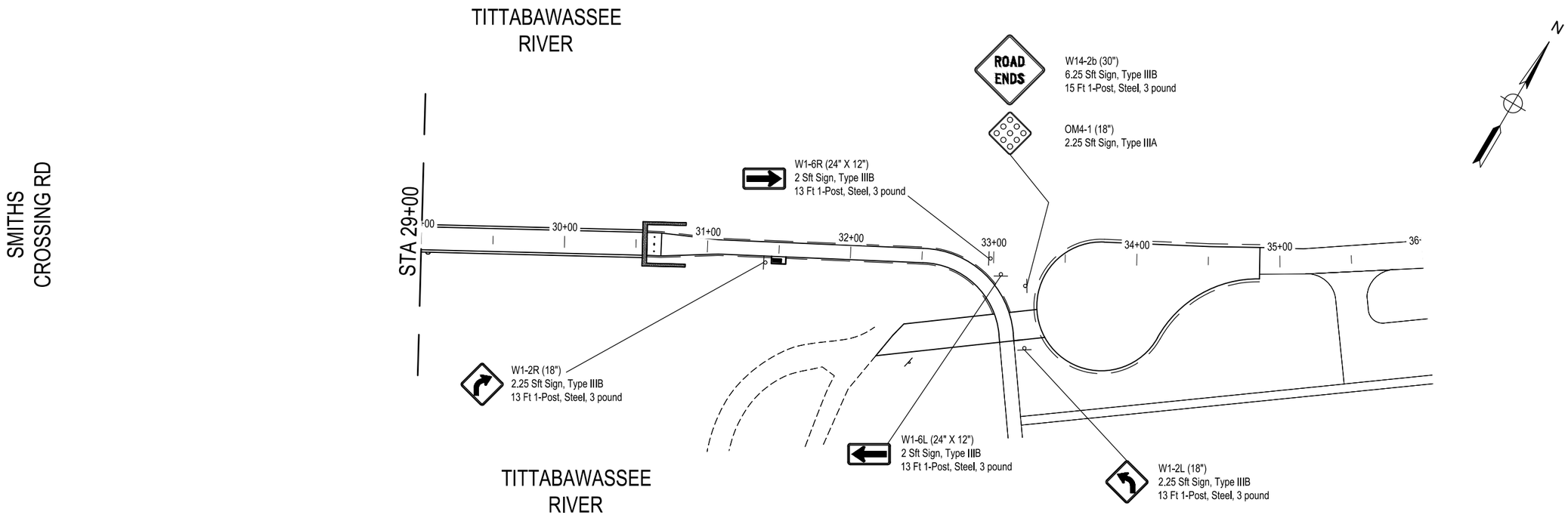

SIGN SPECIAL DETAIL

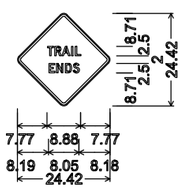

W11-15a-MOD;
18.00" across sides 1.25" Radius, 0.50" Border, 0.25" Indent, Black on, Yellow;
"TRAIL", D 2K;
"ENDS", D 2K;
Table of widths and spaces

	T		R		A		I		L	
7.77	1.55	0.38	1.70	0.20	2.12	0.38	0.40	0.60	1.55	7.77
	E		N		D		S			
8.19	1.55	0.42	1.70	0.60	1.70	0.38	1.70	8.18		

12/19/2024 3:56 PM ryan.sullivan

FINAL PLAN REVISIONS			
NO.	DATE	AUTH	DESCRIPTION

SAGINAW OFFICE
230 S. Washington Ave.
Saginaw, MI 48607
Tel. 989-754-4717
Fax. 989-754-4440
www.SpicerGroup.com

VERT. (FT) 0 N/A
HORZ. (FT) 0 80

SGI PROJECT NO: 131018SG2021
DATE: DECEMBER, 2024
FILE: LP_SIGN.DWG
CS: 56000
JN: 212097

PERMANENT PAVEMENT MARKING & SIGNING
BAILEY BRIDGE AT SMITHS CROSSING
STA 29+00 TO STA 34+85.9 (POE)

DRAWING	SHEET
SIGN2	22

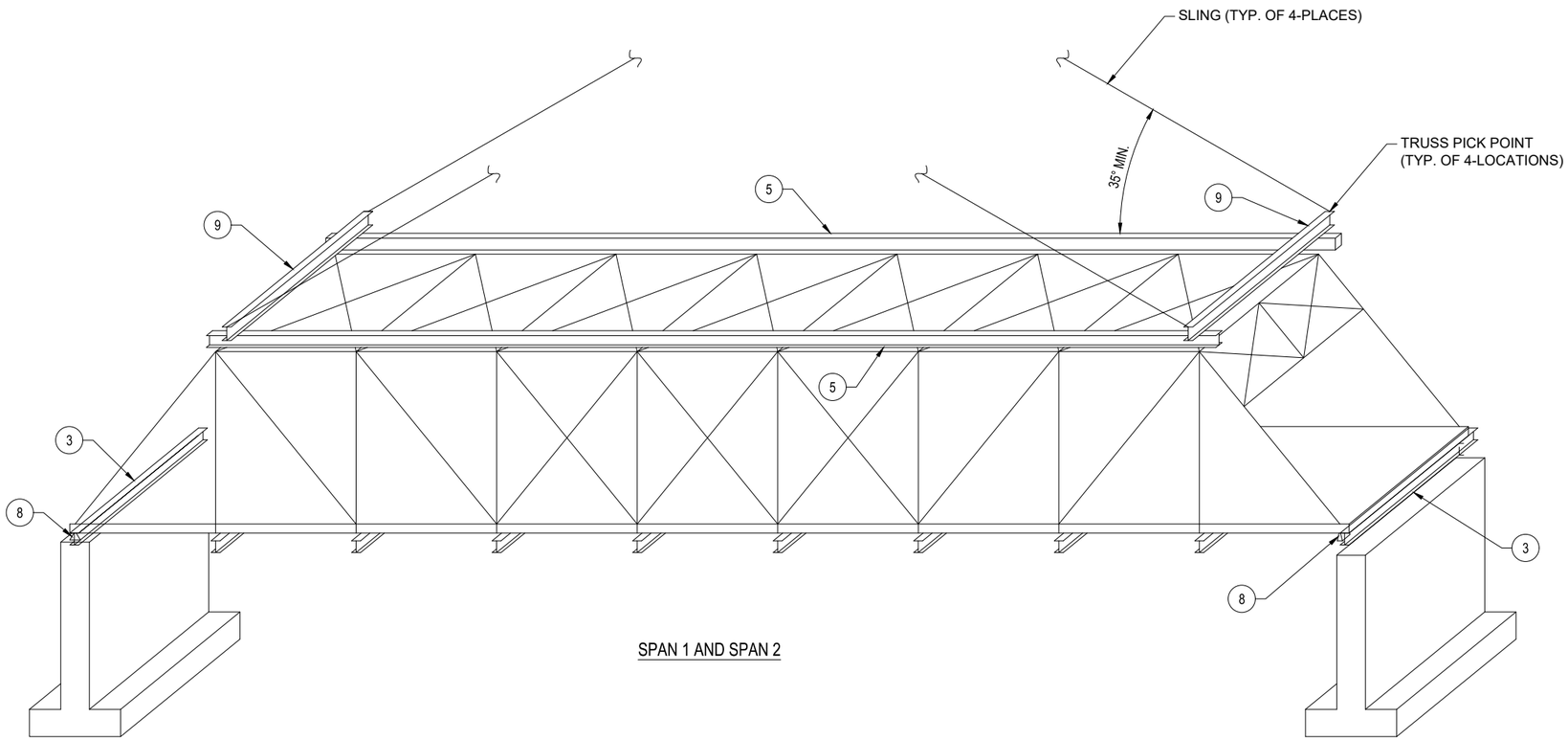

SPAN 1 AND SPAN 2

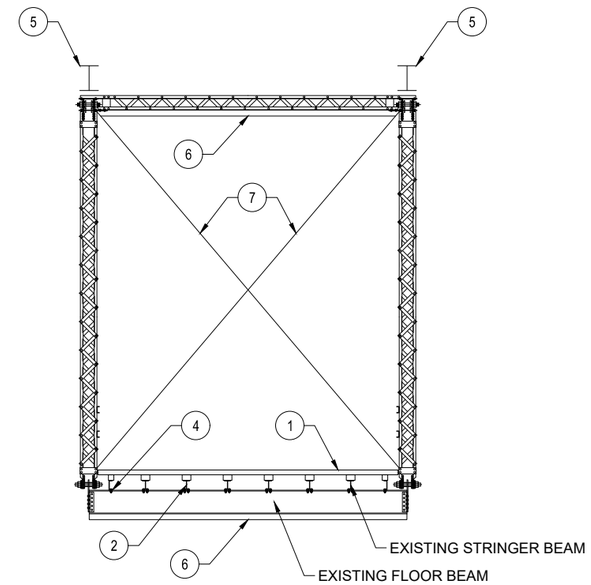

CROSS SECTION

FOR INFORMATION ONLY

TRUSS REMOVE AND TRANSPORT PROCEDURE (TRUSS TRANSPORT AND INSTALL PROCEDURE SIMILAR)

SEE SPECIAL PROVISIONS . CONTRACTOR TO SUBMIT PLAN AND DETAILS SIGNED AND SEALED BY A LICENSED PROFESSIONAL ENGINEER FOR APPROVAL FOR REMOVING AND TRANSPORTING TRUSSES TO THE STAGING AREA AND FOR TRANSPORTING AND INSTALLING TRUSSES ON NEW SUBSTRUCTURES.

1. REMOVE AND DISPOSE OF SIP FORMS WITH HMA SURFACE.
2. REMOVE INTERIOR STRINGERS.
3. ADD TEMPORARY FLOOR BEAMS HP12X53 CONNECTING TO TRUSS.
4. TEMPORARILY WELD FASCIA STRINGERS TO FLOOR BEAMS (THIS WILL SERVE AS A REDUNDANCY FOR THE BOTTOM CHORD).
5. CONNECT TEMPORARY TOP CHORD HP12X53 AT EACH PANEL POINT.
6. ADD TEMPORARY UPPER SWAY CROSS BRACING AND LOWER HORIZONTAL CROSS BRACING AT LOCATIONS OF MISSING OR DAMAGED BRACING.
7. ADD TEMPORARY ADJUSTABLE X-BRACING AT EACH PANEL POINT.
8. DISCONNECT BEARINGS FROM SUBSTRUCTURES. ADD TEMPORARY STIFFENERS AT BEARINGS TO ESTABLISH INTEGRITY FOR TRANSPORTING.
9. INSTALL SPREADER BEAMS TO UPPER PANEL POINT USED TO LIFT TRUSS.
10. SET TRUSS ON BARGE(S).
11. TRANSPORT TRUSS ACCROSS BARGE(S) TO THE EAST BANK.
12. LIFT TRUSS TO TRAILER.
13. PREPARE STAGING AREA TO PROVIDE LEVEL AND STABLE SUPPORT AT ALL LOWER PANEL POINT LOCATIONS. INCLUDED WITH EXISTING TRUSS, REMOVE AND TRANSPORT.
14. RELOCATE TRUSS TO STAGING AREA.

FOR INFORMATION ONLY

ESTIMATED WEIGHTS EACH SPAN
18 TONS - TRUSS (DECKING AND STRINGERS REMOVED)
11 TONS - MISCELLANEOUS BRACING/RIGGING

MISCELLANEOUS QUANTITIES

1	LSUM	Existing Truss, Transport and Install

KEY

(X) - DENOTES NOTE LOCATION ON BRIDGE

12/19/2024 3:56 PM austin.evans

FINAL PLAN REVISIONS

NO.	DATE	AUTH	DESCRIPTION

SAGINAW OFFICE
230 S. Washington Ave.
Saginaw, MI 48607
Tel. 989-754-4717
Fax. 989-754-4440
www.SpicerGroup.com

VERT. (FT) 0 N/A
HORZ. (FT) 0 N/A

SGI PROJECT NO: 131018SG2021
DATE: DECEMBER, 2024
FILE: DB-1234- RIGGING SCHEME.DWG

CS: 56000
JN: 212097

RIGGING SCHEME
BAILEY BRIDGE AT SMITHS CROSSING

DRAWING: RIGGING
SHEET: 23

12/20/2024 3:16 PM ryan.sullivan

FINAL PLAN REVISIONS			
NO.	DATE	AUTH	DESCRIPTION

SAGINAW OFFICE
230 S. Washington Ave.
Saginaw, MI 48607
Tel. 989-754-4717
Fax. 989-754-4440
www.SpicerGroup.com

VERT. (FT) 0 N/A
HORZ. (FT) 0 80

SGI PROJECT NO: 131018SG2021
DATE: DECEMBER, 2024
FILE: DB-1234- STAGING AREA R1.DWG

CS: 56000
JN: 212097

STAGING SHEET
BAILEY BRIDGE AT SMITHS CROSSING

DRAWING	SHEET
STAGING	24

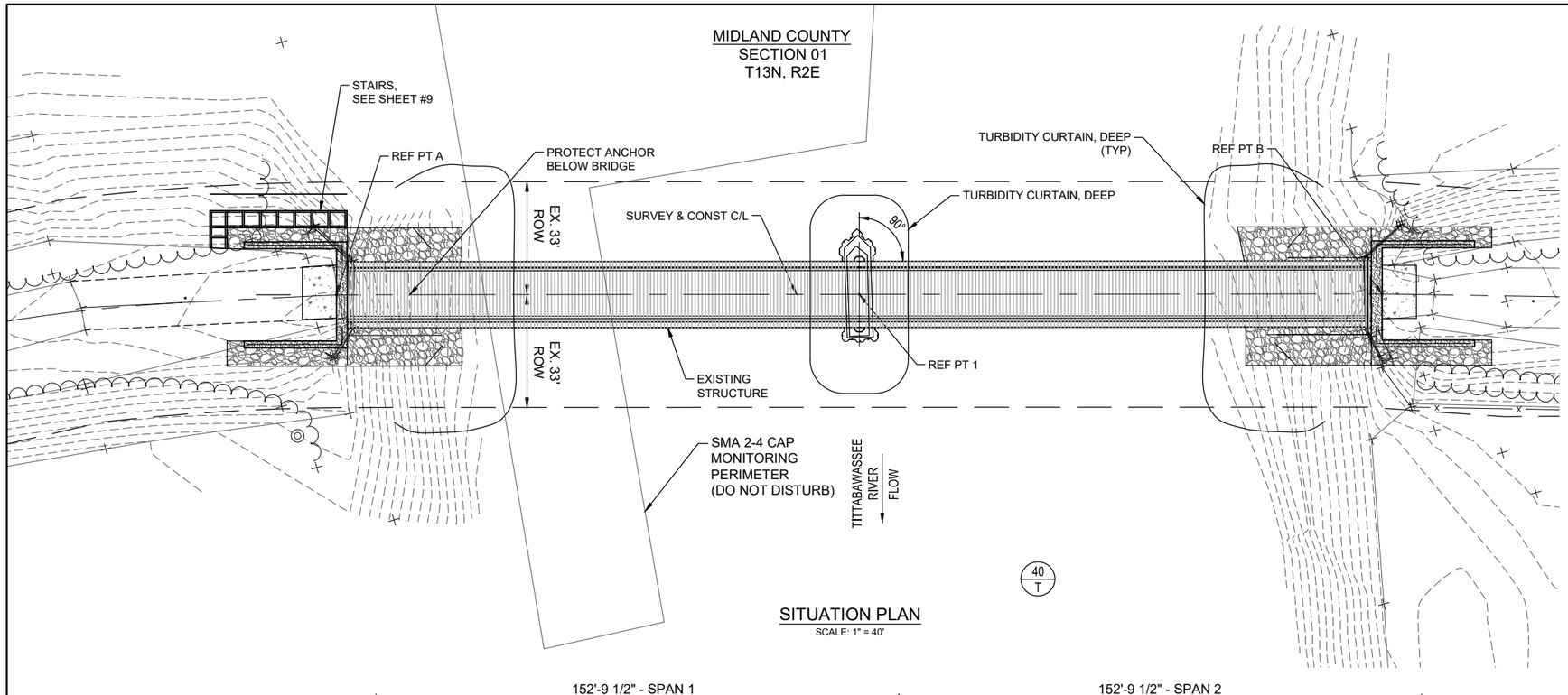

SITUATION PLAN

SCALE: 1" = 40'

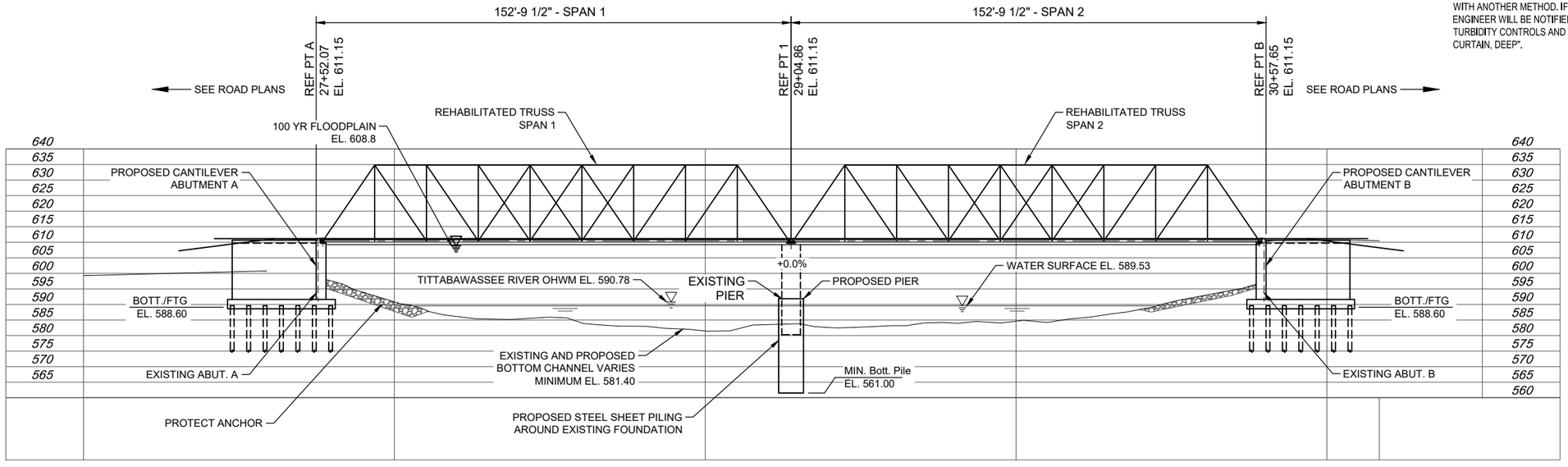

PROFILE

SCALE: 1/4" = 1'-0"

EXISTING STRUCTURE

THE EXISTING STRUCTURE IS A 300' LONG, TWO SPAN STEEL THROUGH TRUSS BRIDGE BUILT IN 1907.

NOTE:
THE WORK COVERED BY THESE PLANS INCLUDES THE REMOVAL, REHABILITATION, PAINTING AND RE-ERECTION OF THE EXISTING TRUSSES LISTED ON THE NATIONAL REGISTER OF HISTORIC PLACES, REMOVAL AND CONSTRUCTION OF THE PROPOSED SUBSTRUCTURES, APPROACH WORK AND PLACING RIPRAP TO THE LIMITS SHOWN.

MEASURES SHALL BE TAKEN SO AS TO NOT DAMAGE THE TRUSSES DURING RIGGING AND TRANSPORT. CONTRACTOR IS RESPONSIBLE FOR REPAIRING DAMAGED AREAS AND TO PRESERVE THE HISTORIC SIGNIFICANCE.

PLAN ELEVATIONS REFER TO NAVD 88 DATUM.

IMMEDIATELY AFTER THE CONSTRUCTION OF THE ABUTMENTS IS COMPLETED, SLOPE PROTECTION AND SEEDING OR SODDING SHALL BE PLACED ON THE ADJACENT EMBANKMENT SLOPES.

BROKEN CONCRETE SHALL NOT BE USED FOR SLOPE PROTECTION.

SEE ROADS PLANS FOR BENCHMARKS, CONTROL POINTS, AND ANY CURVE DATA.

THE WORK COVERED BY THESE PLANS INCLUDES CHANNEL EXCAVATION, CONSTRUCTION OF THE PROPOSED BRIDGE AND PLACING RIPRAP TO THE LIMITS SHOWN. ALL OTHER WORK IS INCLUDED IN THE ROAD PLANS THAT ARE A PART OF THIS CONTRACT.

LOCATE ALL ACTIVE UNDERGROUND UTILITIES PRIOR TO STARTING WORK AND CONDUCT OPERATIONS IN SUCH A MANNER AS TO ENSURE THAT THOSE UTILITIES NOT REQUIRING RELOCATION WILL NOT BE DISTURBED.

WATER LEVEL IS SUBJECT TO CHANGE. MAKE A DETERMINATION OF WATER LEVELS THAT MAY EXIST DURING CONSTRUCTION.

IMPLEMENT MEASURES TO PREVENT DEBRIS FROM FALLING FROM THE STRUCTURE. IF DEBRIS FALLS INTO THE WATERWAY, REMOVE IT WITHIN 24 HOURS. SINCE DISTURBANCE OF THE WATERWAY BOTTOM MAY BE AS HARMFUL AS THE DEBRIS ITSELF, THE PREVENTIVE MEASURES MUST BE EFFECTIVE. REMOVAL OF DEBRIS IS INCLUDED IN RELATED ITEMS OF WORK.

THE TURBIDITY CURTAIN TO BE INSTALLED AND MAINTAINED PER THE MDOT 2020 CONSTRUCTION SPECIFICATIONS AND THE MDOT SESC MANUAL.

TURBIDITY CONTROLS AND MONITORING SHALL BE IN PLACE FOR THE DURATION OF ALL STREAM CONSTRUCTION INCLUDING ACTIVE DREDGING, INSTALLATION OF SHEET PILES, BARGE DEPLOYMENT, BARGE NAVIGATION, AND REMOVAL OF PIER OR OTHER EXISTING IN-STREAM STRUCTURES. TURBIDITY MONITORING SHALL BE DONE IN ACCORDANCE WITH THE MDOT SESC MANUAL.

IF TURBIDITY THRESHOLDS ARE EXCEEDED, TURBIDITY MONITORING EQUIPMENT CAN BE CHECKED AND/OR VERIFIED WITH ANOTHER METHOD. IF TURBIDITY LEVELS ARE VERIFIED AND ATTRIBUTED TO SITE CONSTRUCTION ACTIVITY, THE ENGINEER WILL BE NOTIFIED, CONSTRUCTION STOPPED, AND ADDITIONAL MITIGATION MEASURES MAY BE NECESSARY. TURBIDITY CONTROLS AND MONITORING SHALL BE INCLUDED IN THE PAY ITEM "EROSION CONTROL, TURBIDITY CURTAIN, DEEP".

CUT AND FILL VOLUMES BETWEEN FLOODPLAIN AND OHWM TABLE

	AVERAGE AREA (SFT)	AVERAGE VOLUME (CFT)	AVERAGE VOLUME (CYD)
FILL - BACKFILL	1162.7	34881.3	1291.9
FILL - CONCRETE	331.3	9938.7	368.1
FILL - RIPRAP	217.0	9765.9	361.7
SUBTOTAL FILL	1711.0	54585.9	2021.7
CUT	1676.7	53554.5	1983.5
NET VOLUME		NET VOLUME = 38.2 CYD FILL	

CUT AND FILL VOLUMES BELOW OHWM TABLE

	AVERAGE AREA (SFT)	AVERAGE VOLUME (CFT)	AVERAGE VOLUME (CYD)
FILL - BACKFILL	32.8	4967.3	184.0
FILL - CONCRETE	249.7	8193.2	303.5
FILL - RIPRAP	109.4	4430.7	164.1
SUBTOTAL FILL	391.9	17591.2	651.5
CUT	391.9	17591.2	633.3
NET VOLUME		NET VOLUME = 18.2 CYD FILL	

MISCELLANEOUS QUANTITIES

2		Ea	Erosion Control, Filter Bag
450		Ft	Erosion Control, Turbidity Curtain, Deep
530		Syd	Riprap, Heavy, Modified

FINAL PLAN REVISIONS

NO.	DATE	AUTH	DESCRIPTION

SAGINAW OFFICE
230 S. Washington Ave.
Saginaw, MI 48607
Tel. 989-754-4717
Fax. 989-754-4440
www.SpicerGroup.com

VERT. (FT) 0 40
HORZ. (FT) 0 40

SGI PROJECT NO: 131018SG2021
DATE: DECEMBER, 2024
FILE: DB-1234- GENERAL PLAN OF SITE.DWG
CS: 56000
JN: 212097

GENERAL PLAN OF SITE
BAILEY BRIDGE AT SMITHS CROSSING

DRAWING: GPOS
SHEET: 25

12/19/2024 3:56 PM matthew.sopcak

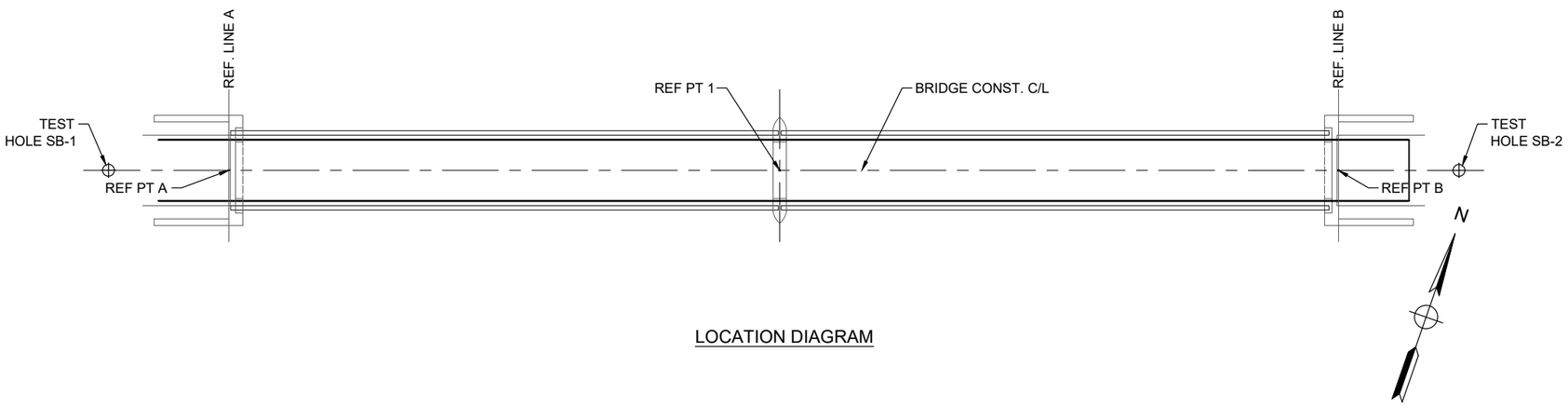

LOCATION DIAGRAM

NOTES:

NUMBERS IN TABLES DENOTE NUMBER OF BLOWS REQUIRED TO DRIVE A 2" O.D. SPLIT SPOON SAMPLER 3 SUCCESSIVE 6" INCREMENTS USING A 140# HAMMER FALLING 30".

CONSISTENCY WAS DETERMINED BY INSPECTION OF SAMPLES AND SUBSTANTIATED BY SOILS RESISTANCE TO DRILLING TOOLS.

THE SOIL BORING LOGS REPRESENT POINT INFORMATION. PRESENTATION OF THIS INFORMATION IN NO WAY IMPLIES THAT SUBSURFACE CONDITIONS ARE THE SAME AT LOCATIONS OTHER THAN THE EXACT LOCATION OF THE BORING.

DRILLING WAS PERFORMED WITH A CME 75 TRUCK MOUNTED DRILL RIG UTILIZING HOLLOW STEM DRILLING METHODS.

ELEVATIONS REFERENCE THE TOP OF THE STANDARD PENETRATION TEST (SPT), ROCK CORE RUN INTERVAL OR SHELBY TUBE SAMPLE.

GeoTran Consultants, LLC

LOG OF SOIL BORING NO.: SB-1

SHEET 1 OF 2

Project Name: Bailey Bridge at Smiths Crossing
Project Location: South Abutment, Midland, Michigan
Project Number: 22-04015G-10
Client: Spicer Group
Date: 6/24/2022

SAMPLE DATA | PROFILE DESCRIPTION | LABORATORY DATA

GROUND SURFACE ELEVATION: 610.5 ft ±

ELEV. (ft)	SAMPLE TYPE/ NUMBER	REC (in.)	BLOWS/ 6 INCHES	STD. PEN. RESIST. N-VALUE	POCKET PEN. (tsf)
610					
	SS-1	18	4 4 9	13	
605	SS-2	18	1 2 1	3	
	SS-3	18	2 3 2	5	
600	SS-4	18	2 2 3	5	
595	SS-5	18	2 3 3	6	
590	SS-6	18	3 3 4	7	
585	SS-7	18	3 3 2	5	
580	SS-8	18	3 5 8	13	
575	SS-9	18	15 20 21	41	

PROFILE DESCRIPTION:
- 610.0 — TOPSOIL: Dark Gray SILTY SAND with Organic Matter (0.5)
- FILL: Dark Brown to Brown SILTY SAND with Trace of Clay and Gravel
- BOTT. FTG/ABUT A EL. 588.60
- 583.5 — Medium Dense to Dense Gray SILTY SAND with Trace of Silt and Gravel (27.0)
- 573.5

LABORATORY DATA: MOIST CONT. (%); DRY DENSITY (pcf); UNCONF. COMP. ST. (psf); ATTERBERG LIMITS: LIQUID LIMIT, PLASTICITY INDEX; Loss on Ignition (%)

Stratification lines represent approximate boundaries; in-situ; transition may be gradual.

Total Drilling Depth: 75 ft
Drilling Contractor: DLZ/American Drilling
Driller: P. Walpet
Drilling Method: CME 75 Truck Mounted Drilling Rig, Using 3-1/4-inch I.D. Hollow Stem Auger to 20 feet and 3-7/8 in. Tri -Cone Rotary Wash to End of Boring.
Backfill Procedure: Borehole backfilled with excavated materials.

Groundwater Levels:
At Time of Drilling: 18.5 ft
End of Drilling: Not Measured

Notes: No groundwater measurement upon completion of the drilling due to use of wash rotary method.

Logged By: D. Yip Reviewed By: M. Luckham Figure No.: 3

GeoTran Consultants, LLC

LOG OF SOIL BORING NO.: SB-1

SHEET 2 OF 2

Project Name: Bailey Bridge at Smiths Crossing
Project Location: South Abutment, Midland, Michigan
Project Number: 22-04015G-10
Client: Spicer Group
Date: 6/24/2022

SAMPLE DATA | PROFILE DESCRIPTION | LABORATORY DATA

GROUND SURFACE ELEVATION: 610.5 ft ±

ELEV. (ft)	SAMPLE TYPE/ NUMBER	REC (in.)	BLOWS/ 6 INCHES	STD. PEN. RESIST. N-VALUE	POCKET PEN. (tsf)
570	SS-10	18	7 10 9	19	4500
565	SS-11	18	4 4 10	14	
560	SS-12	18	7 11 12	23	
555	SS-13	18	25 26 18	44	
550	SS-14	18	10 8 12	20	
545	SS-15	18	5 10 8	18	
540	SS-16	18	11 22 32	54	
535	SS-17	18	13 19 27	46	

PROFILE DESCRIPTION:
- Very Stiff Gray SILTY CLAY with Little Sand and Trace of Gravel (37.0)
- 568.5 — ABUT A MIN. PILE TIP EL. 561.50 (42.0)
- PIER 1 MIN. PILE TIP EL. 561.00
- Medium Dense to Very Dense Gray SILTY SAND with Trace of Gravel and Occasional Cobbles
- ABUT A EST. PILE TIP EL. 539.60 (70.0)
- 535.5 — End of Boring at 75.0 ft. (75.0)

LABORATORY DATA: MOIST CONT. (%); DRY DENSITY (pcf); UNCONF. COMP. ST. (psf); ATTERBERG LIMITS: LIQUID LIMIT, PLASTICITY INDEX; Loss on Ignition (%)

GeoTran Consultants, LLC

LOG OF SOIL BORING NO.: SB-2

SHEET 1 OF 2

Project Name: Bailey Bridge at Smiths Crossing
Project Location: North Abutment, Midland, Michigan
Project Number: 22-04015G-10
Client: Spicer Group
Date: 6/23/2022

SAMPLE DATA | PROFILE DESCRIPTION | LABORATORY DATA

GROUND SURFACE ELEVATION: 610.5 ft ±

ELEV. (ft)	SAMPLE TYPE/ NUMBER	REC (in.)	BLOWS/ 6 INCHES	STD. PEN. RESIST. N-VALUE	POCKET PEN. (tsf)
610					
	SS-1	18	11 10 5	15	
605	SS-2	18	4 7 10	17	
	SS-3	18	2 3 6	9	
600	SS-4	18	3 4 5	9	
595	SS-5	18	1 3 2	5	
590	SS-6	18	15 35 50	85	>9000
585	SS-7	18	13 19 28	47	>9000
580	SS-8	18	14 24 50	74	>9000
575	SS-9	18	27 31 45	76	>9000

PROFILE DESCRIPTION:
- 609.5 — TOPSOIL: Dark Brown CLAYEY SAND with Organic Matter (1.0)
- FILL: Dark Brown and Brown SAND with Trace to Little Silt, Trace of Clay, Gravel and Occasional Roots
- 593.5 (17.0)
- BOTT. FTG/ABUT B EL. 588.60
- Hard to Very Hard Brown to Gray SILTY CLAY with Trace to Little Sand and Trace of Gravel
- 573.5

LABORATORY DATA: MOIST CONT. (%); DRY DENSITY (pcf); UNCONF. COMP. ST. (psf); ATTERBERG LIMITS: LIQUID LIMIT, PLASTICITY INDEX; Loss on Ignition (%)

Stratification lines represent approximate boundaries; in-situ; transition may be gradual.

Total Drilling Depth: 75 ft
Drilling Contractor: DLZ/American Drilling
Driller: P. Walpet
Drilling Method: CME 75 Truck Mounted Drilling Rig, Using 3-1/4-inch I.D. Hollow Stem Auger to End of Boring.
Backfill Procedure: Borehole backfilled with excavated materials.

Groundwater Levels:
At Time of Drilling: 38.5 ft
End of Drilling: Not Measured

Notes: No groundwater measurement upon completion of drilling due to water introdue to the borehole during drilling

Logged By: D. Yip Reviewed By: M. Luckham Figure No.: 4

GeoTran Consultants, LLC

LOG OF SOIL BORING NO.: SB-2

SHEET 2 OF 2

Project Name: Bailey Bridge at Smiths Crossing
Project Location: North Abutment, Midland, Michigan
Project Number: 22-04015G-10
Client: Spicer Group
Date: 6/23/2022

SAMPLE DATA | PROFILE DESCRIPTION | LABORATORY DATA

GROUND SURFACE ELEVATION: 610.5 ft ±

ELEV. (ft)	SAMPLE TYPE/ NUMBER	REC (in.)	BLOWS/ 6 INCHES	STD. PEN. RESIST. N-VALUE	POCKET PEN. (tsf)
570	SS-10	18	22 40 50	90	
565	SS-11	18	28 38 50	88	
560	SS-12	18	20 26 31	57	
555	SS-13	13	23 41 50/1"	91/7"	
550	SS-14	18	18 32 46	78	
545	SS-15	14	32 40 50/2"	90/8"	
540	SS-16	18	29 36 43	79	
535	SS-17	18	26 33 48	81	

PROFILE DESCRIPTION:
- 37.0
- ABUT B MIN. PILE TIP EL. 565.00
- Very Dense Gray SILTY SAND with Trace to Little Gravel and Occasional Cobbles
- 535.5 — End of Boring at 75.0 ft. (75.0)

LABORATORY DATA: MOIST CONT. (%); DRY DENSITY (pcf); UNCONF. COMP. ST. (psf); ATTERBERG LIMITS: LIQUID LIMIT, PLASTICITY INDEX; Loss on Ignition (%)

FINAL PLAN REVISIONS			
NO.	DATE	AUTH	DESCRIPTION

Spicer group ©2024

SAGINAW OFFICE
230 S. Washington Ave.
Saginaw, MI 48607
Tel. 989-754-4717
Fax. 989-754-4440
www.SpicerGroup.com

VERT. (FT) 0 — N/A
HORZ. (FT) 0 — N/A

SGI PROJECT NO: 131018SG2021
DATE: DECEMBER, 2024
FILE: DB-1234- LOG OF BORINGS.DWG

CS: 56000
JN: 212097

LOG OF BORINGS
BAILEY BRIDGE AT SMITHS CROSSING

DRAWING: LOB
SHEET: 26

12/19/2024 3:56 PM matthew.sopcak

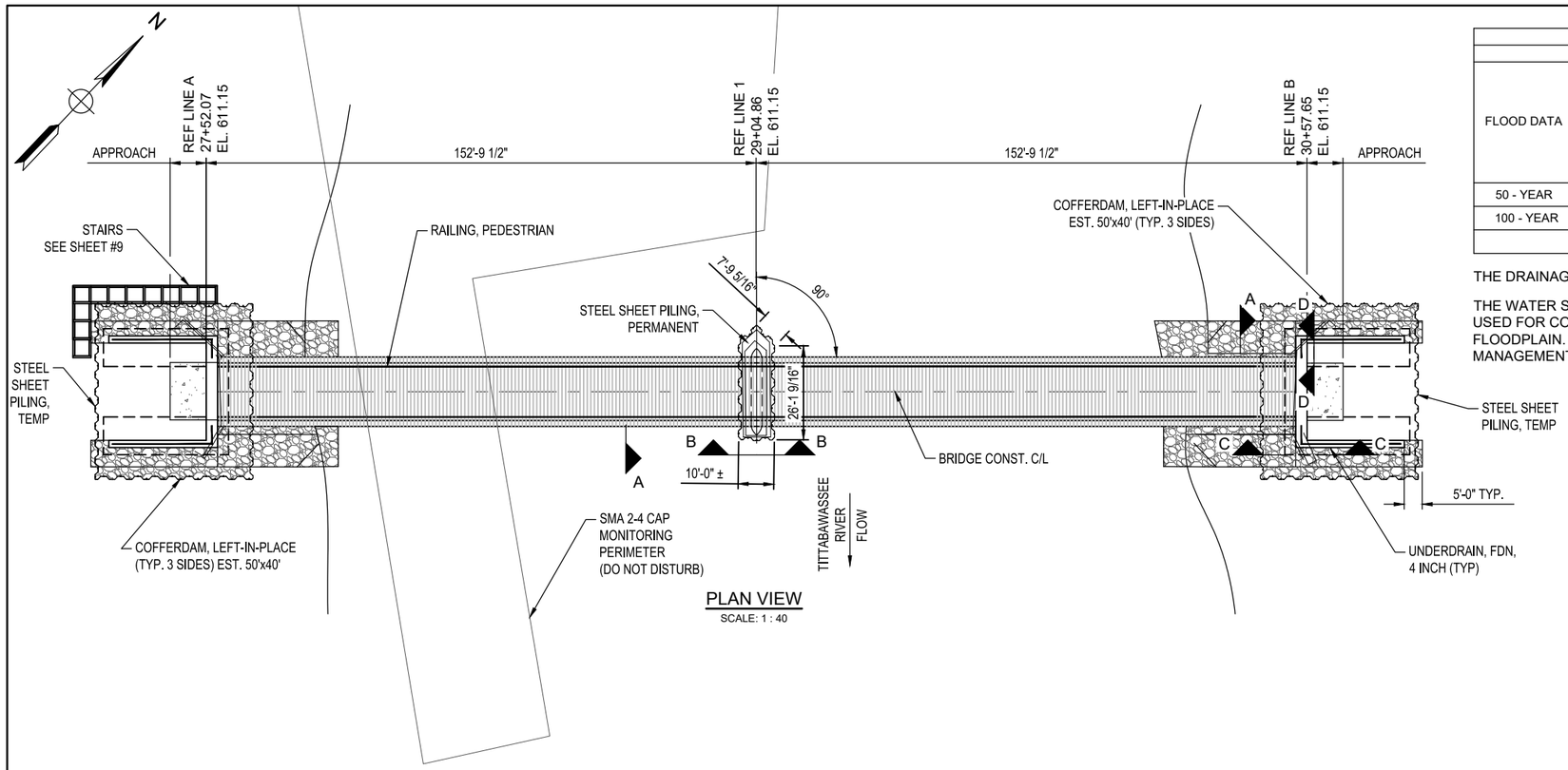

PLAN VIEW
SCALE: 1 : 40

SUMMARY OF HYDRAULIC ANALYSIS							
EXISTING				PROPOSED			
FLOOD DATA	DISCHARGE (CFS)	WATER SURFACE ELEV. AT UPSTREAM FACE OF STRUCTURE (FT)	VELOCITY IN DOWNSTREAM CHANNEL (FPS)	WATER SURFACE ELEV. AT UPSTREAM FACE OF STRUCTURE (FT)	VELOCITY IN DOWNSTREAM CHANNEL (FPS)	WATERWAY AREA AT DOWNSTREAM FACE (SF)	CHANGE IN WATER SURFACE ELEVATION UPSTREAM OF PROPOSED STRUCTURE (FT)
50 - YEAR	41700	607.81	4.86	607.81	4.91	9403.45	0.02
100 - YEAR	47800	608.5	5.23	608.5	5.29	10597.02	0.02
MAXIMUM BRIDGE AREA BELOW LOW CHORD IS 6970.03 SQUARE FEET							

THE DRAINAGE AREA CONTRIBUTORY TO THIS CROSSING IS 2,355 SQUARE MILES. (FROM EGLE)

THE WATER SURFACE AND/OR ENERGY GRADE ELEVATIONS SHOWN ON THE ABOVE HYDRAULIC TABLE ARE TO BE USED FOR COMPARISON PURPOSES ONLY AND ARE NOT TO BE USED FOR ESTABLISHING A REGULATORY FLOODPLAIN. THE ELEVATIONS MAY BE USED PROVIDED THEY ARE VERIFIED WITH THE LAND AND WATER MANAGEMENT DIVISION, MICHIGAN DEPARTMENT OF ENVIRONMENT, GREAT LAKES, AND ENERGY.

MISCELLANEOUS QUANTITIES

2848		Cyd	Non Haz Contaminated Material Handling and Disposal, LM
1600		Cyd	Backfill, Structure, CIP
2435		Cyd	Excavation, Fdn
180		Ft	Underdrain, Fdn, 4 inch
60		Ft	Underdrain Outlet, 4 inch
4		Ea	Underdrain, Outlet Ending, 4 inch
2540		Sft	Steel Sheet Piling, Permanent
2355		Sft	Steel Sheet Piling, Temp
1		LSUM	Cofferdams, Left in Place
4575		Sft	False Decking
732		Ft	Railing, Pedestrian
1		LSUM	Structures, Rehabilitation, Rem Portions, Special

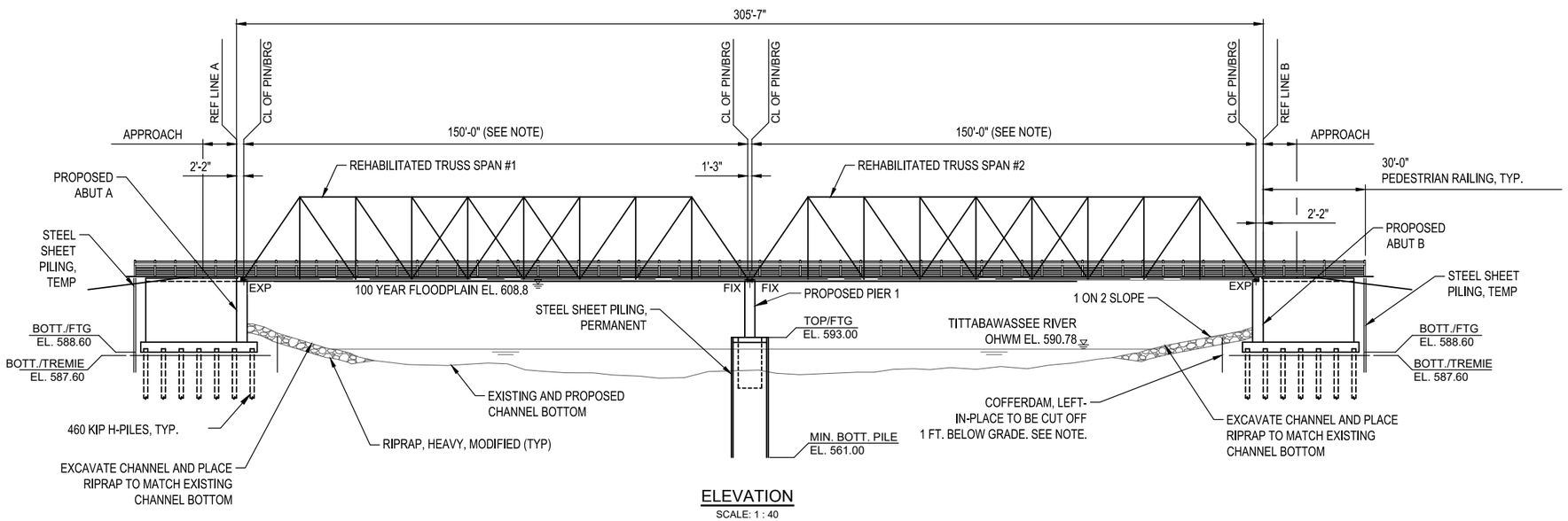

ELEVATION
SCALE: 1 : 40

NOTES

THE RECONSTRUCTION DESIGN IS BASED ON CURRENT AASHTO LRFD BRIDGE DESIGN SPECIFICATION PEDESTRIAN LOADING OF 90 PSF AND A MAINTENANCE VEHICLE H-10 LOADING. THESE ARE NOT APPLIED CONCURRENTLY. LIVE LOAD DEFLECTION DOES NOT EXCEED 1/800 OF SPAN LENGTH.

WITHOUT THE PREVENTIVE MEASURES SHOWN ON THESE PLANS, THERE IS A POSSIBILITY THAT STREAM BED SCOUR MAY OCCUR. THE ESTIMATED TOTAL SCOUR DEPTH IS CALCULATED TO BE 21.7 FEET FROM FINISHED GRADE AT ABUT. B, 25.5 FEET AT ABUT. A, AND 19.4 FEET AT PIER 1. THESE DEPTHS ARE BASED ON A 100 YEAR RUNOFF EVENT.

THE TREMIE SEAL DESIGN WAS BASED ON A WATER SURFACE AT EL. 590.8

FALSE DECKING SHALL INCLUDE THE AREA BOUNDED BY REFERENCE LINES A & B AND OUTSIDE FLANGE FASCIAS. THE ESTIMATED AREA IS 4575 SQUARE FEET DURING REMOVAL AND CONSTRUCTION.

COFFERDAM DIMENSIONS ARE FOR INFORMATION ONLY AND ARE BASED ON THE APPARENT LOCATION OF EXISTING SUBSTRUCTURES. FIELD VERIFY CONDITIONS PRIOR TO CONSTRUCTION. NO ADDITIONAL COST WILL BE INCURRED FOR DIFFERING CONDITIONS.

FIELD VERIFY TRUSS REFERENCE DIMENSIONS PRIOR TO INSTALLING TRUSS BEARING ASSEMBLIES.

COFFERDAMS LEFT IN PLACE SHALL BE CUT OFF 1 FOOT BELOW GRADE. IN LOCATIONS WHERE RIPRAP IS TO BE PLACED, CUT OFF COFFERDAMS 6" BELOW GEOTEXTILE LINER.

AS-BUILT INFORMATION IS NOT AVAILABLE. EXTENT OF EXISTING FOUNDATIONS IS UNKNOWN. FIELD VERIFY CONDITIONS PRIOR TO CONSTRUCTION AND NOTIFY ENGINEER OF DIFFERING CONDITIONS. NO ADDITIONAL COST WILL BE INCURRED FOR DIFFERING CONDITIONS.

THE RIPRAP QUANTITY IS BASED ON THE LATERAL DIMENSIONS OF THE AREA TO BE PROTECTED, REGARDLESS OF THE NUMBER OF LAYERS REQUIRED.

12/19/2024 3:57 PM matthew.sopcak

FINAL PLAN REVISIONS			
NO.	DATE	AUTH	DESCRIPTION

SAGINAW OFFICE
230 S. Washington Ave.
Saginaw, MI 48607
Tel. 989-754-4717
Fax. 989-754-4440
www.SpicerGroup.com

VERT. (FT) 0 N/A
HORZ. (FT) 0 40

SGI PROJECT NO: 131018SG2021
DATE: DECEMBER, 2024
FILE: DB-1234- GENERAL PLAN OF STRUCTURE.DWG
CS: 56000
JN: 212097

GENERAL PLAN OF STRUCTURE
BAILEY BRIDGE AT SMITHS CROSSING

DRAWING	SHEET
GPS	27

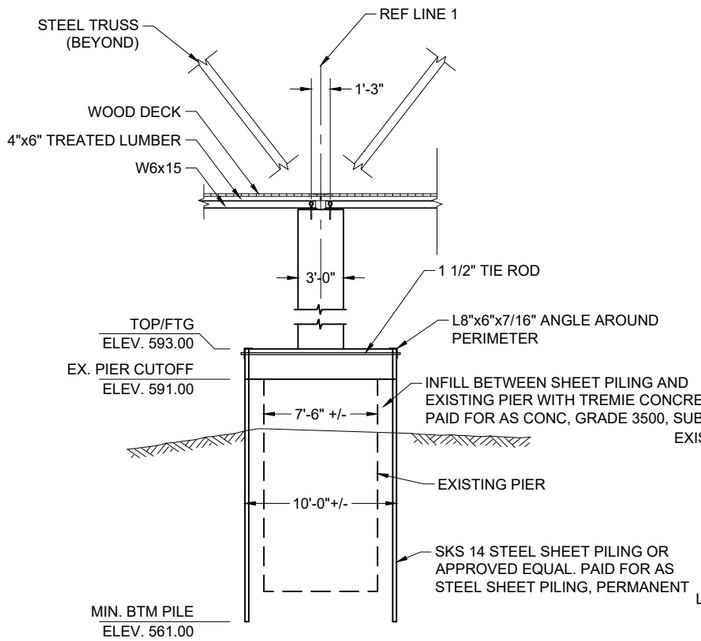

SECTION B-B

NOTES:
* AS BUILT INFORMATION IS NOT AVAILABLE. EXTENT OF EXISTING FOUNDATIONS IS UNKNOWN. FIELD VERIFY CONDITIONS PRIOR TO CONSTRUCTION AND NOTIFY ENGINEER OF DIFFERING CONDITIONS.

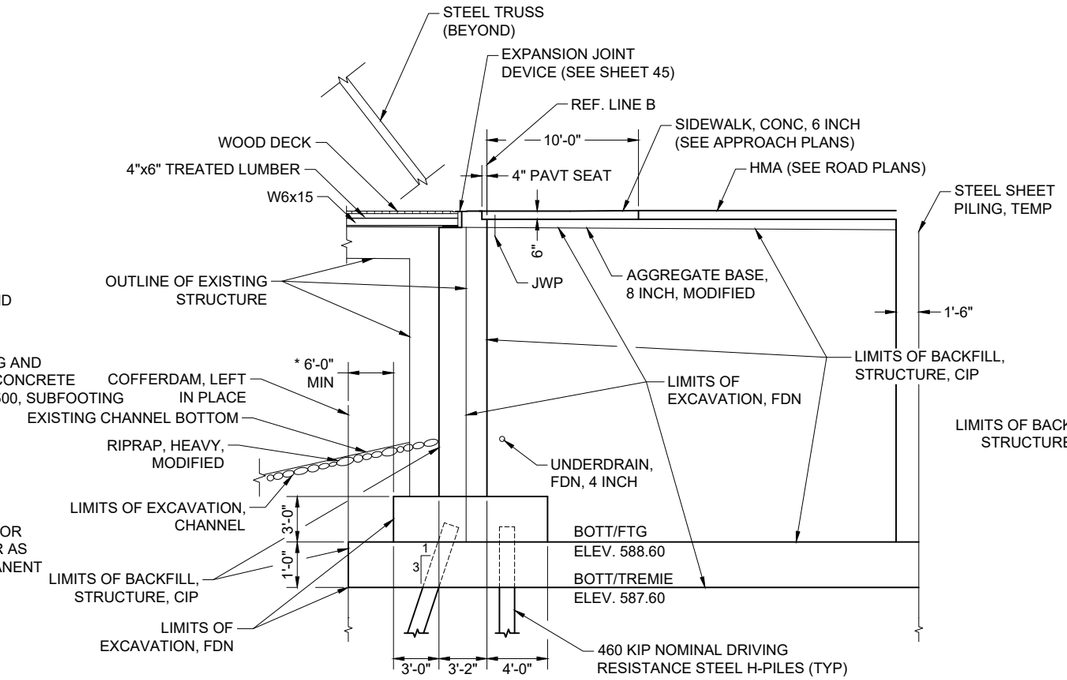

SECTION C-C

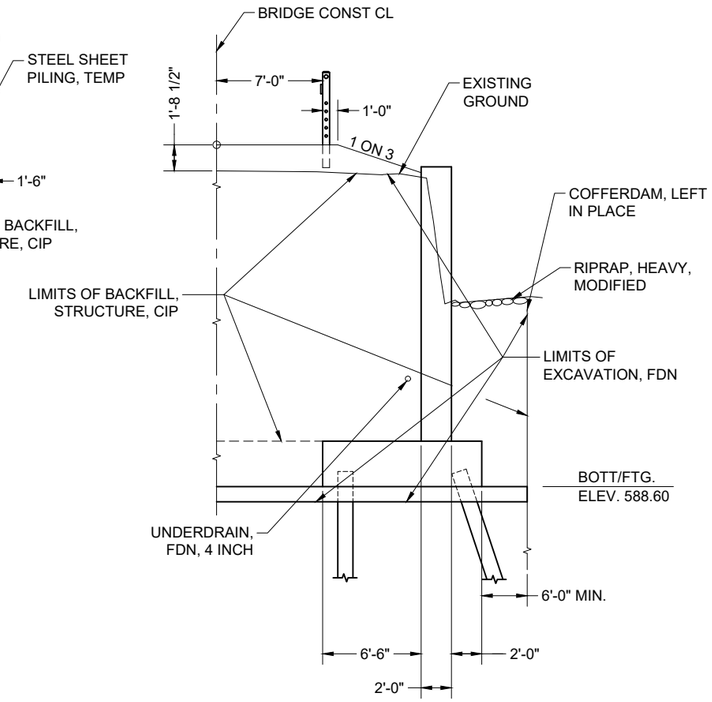

SECTION D-D

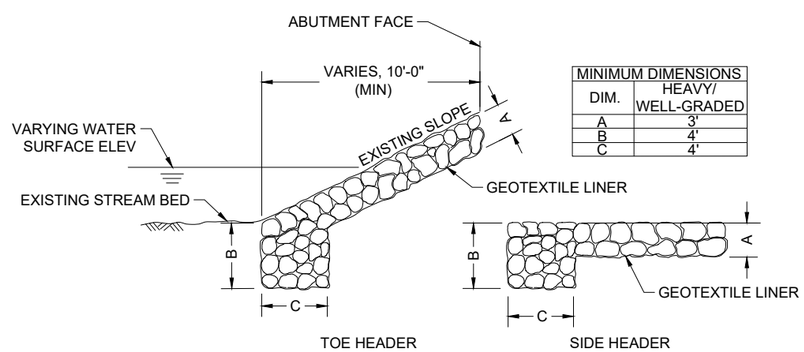

MINIMUM DIMENSIONS	
DIM.	HEAVY/ WELL-GRADED
A	3'
B	4'
C	4'

RIPRAP HEADER DETAILS

TOP OF RIPRAP MUST BE AT OR BELOW EXISTING STREAMBED/ SLOPE ELEVATION.

AN APPROPRIATE METHOD OF WATER DIVERSION FOR PLACING RIPRAP SHALL BE PROPOSED BY THE CONTRACTOR AND APPROVED BY THE ENGINEER. IF WATER IS SHALLOW (LESS THAN TWO FEET), TEMPORARY CONCRETE BARRIERS OR SANDBAGS MAY BE USED TO DIVERT FLOW.

THE RIPRAP SCHEME SHOWN IS A MINIMUM REQUIREMENT FOR SCOUR.

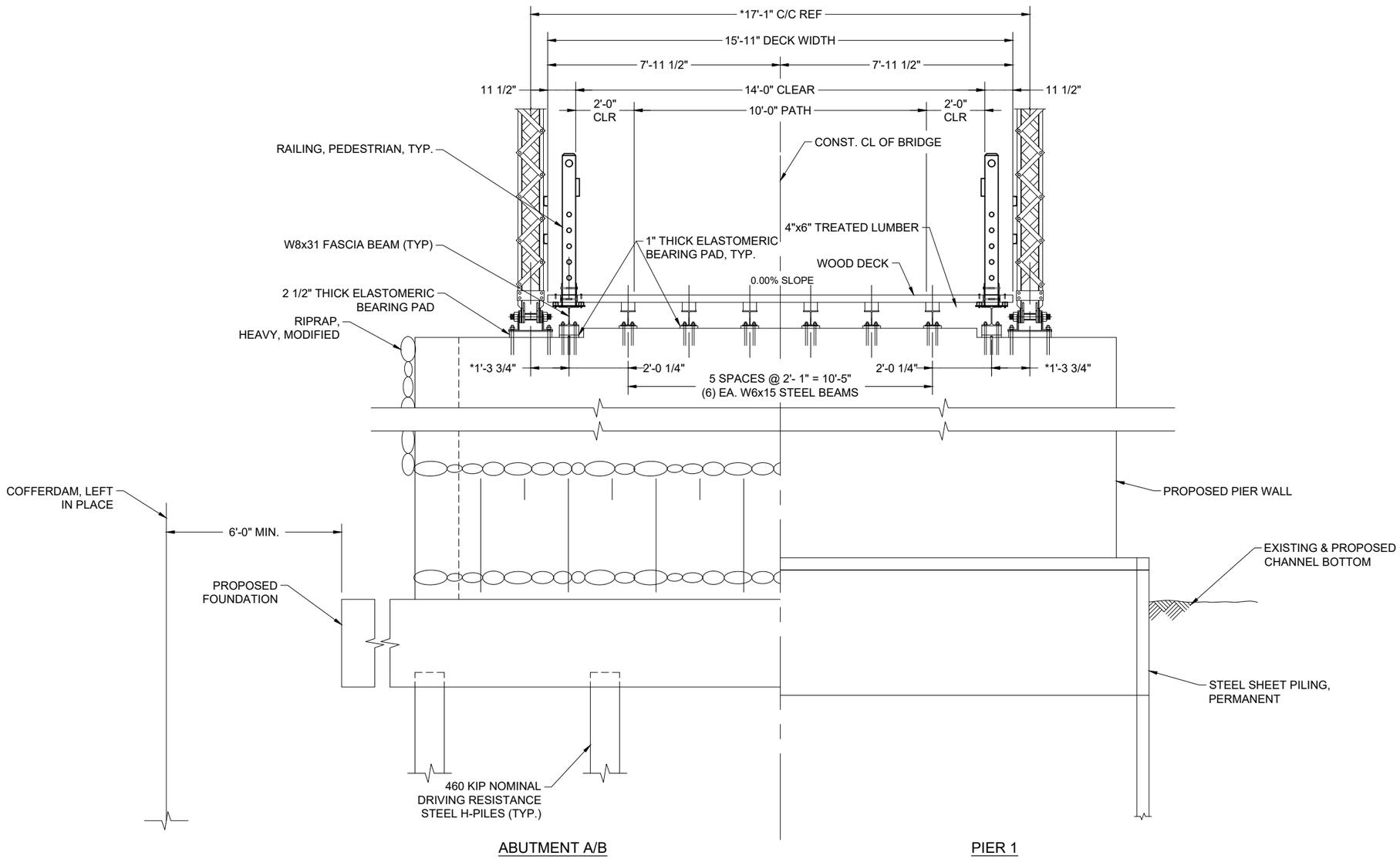

SECTION A-A

SCALE: 1/4" = 1'-0"

MISCELLANEOUS NOTE

AS BUILT INFORMATION IS NOT AVAILABLE. EXTENT OF EXISTING FOUNDATIONS IS UNKNOWN. FIELD VERIFY CONDITIONS PRIOR TO CONSTRUCTION AND NOTIFY ENGINEER OR DIFFERING CONDITIONS.

* CONTRACTOR SHALL TAKE FIELD MEASUREMENTS OF EXISTING TRUSS PRIOR TO SETTING ANCHOR BOLT LOCATION. FIELD MEASUREMENTS TO BE INCLUDED IN PAY ITEM STRUCTURAL STEEL, RESTORATION AND ERECT.

FINAL PLAN REVISIONS

NO.	DATE	AUTH	DESCRIPTION

SAGINAW OFFICE
230 S. Washington Ave.
Saginaw, MI 48607
Tel. 989-754-4717
Fax. 989-754-4440
www.SpicerGroup.com

VERT. (FT) 0 N/A
HORZ. (FT) 0 4

SGI PROJECT NO: 131018SG2021
DATE: DECEMBER, 2024
FILE: DB-1234- GENERAL PLAN OF STRUCTURE 3.DWG

CS: 56000
JN: 212097

GENERAL PLAN OF STRUCTURE 3
BAILEY BRIDGE AT SMITHS CROSSING

DRAWING	SHEET
GPS3	29

12/19/2024 3:57 PM austin.evans

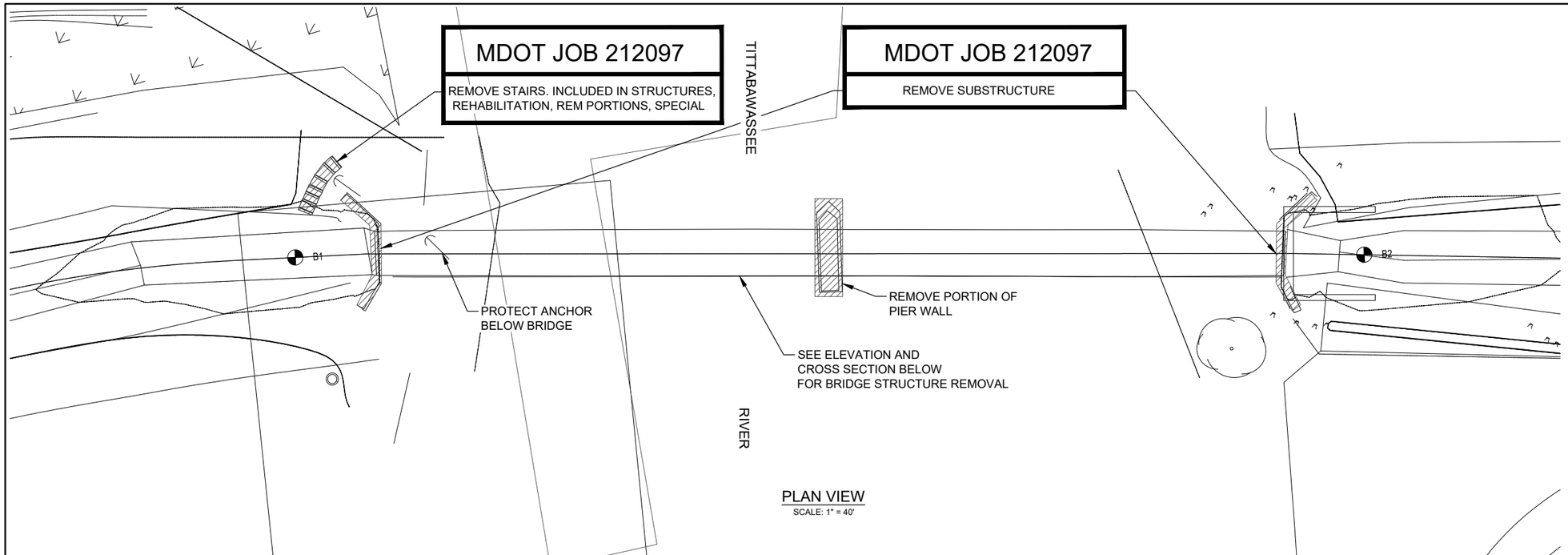

PLAN VIEW
SCALE: 1" = 40'

MDOT JOB 212097

THE ONLY ITEMS OF WORK TO BE DONE FROM THIS SHEET ARE IDENTIFIED BY USING THE LEGEND BELOW, LABELED WITH THIS PROJECT'S JOB NUMBER.

PROPOSED WORK

DENOTES REMOVAL PORTION

NOTE: THE BRIDGE PAINT MAY CONTAIN LEAD.

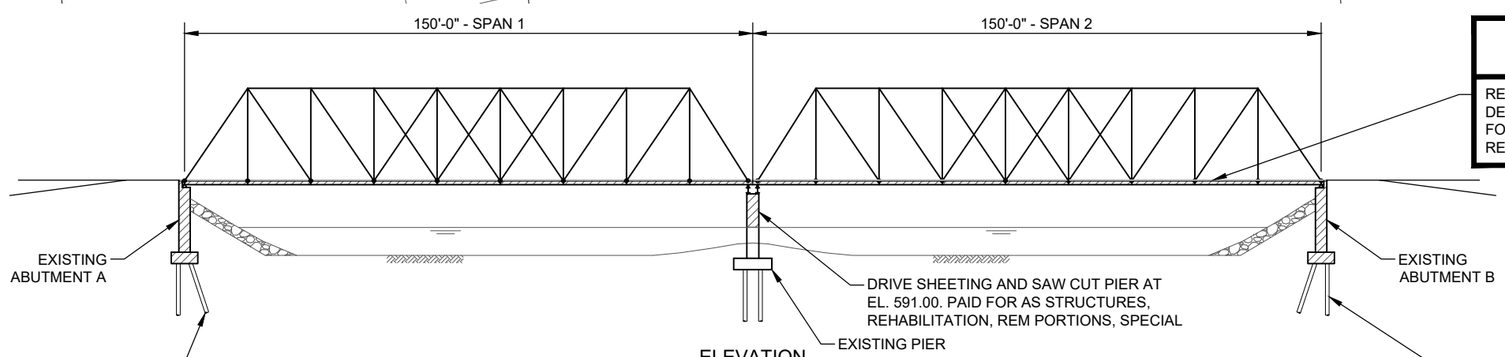

MDOT JOB 212097

REMOVE STEEL STRINGERS, STEEL DECKING, HMA OVERLAY AND RAILING. PAID FOR AS STRUCTURES, REHABILITATION, REM PORTIONS, SPECIAL

ELEVATION
SCALE: 1" = 40'

MDOT JOB 212097

REMOVE EXISTING PILES IF NECESSARY. PAID FOR AS STRUCTURES, REHABILITATION, REM PORTIONS, SPECIAL

MDOT JOB 212097

REMOVE EXISTING PILES IF NECESSARY. PAID FOR AS STRUCTURES, REHABILITATION, REM PORTIONS, SPECIAL

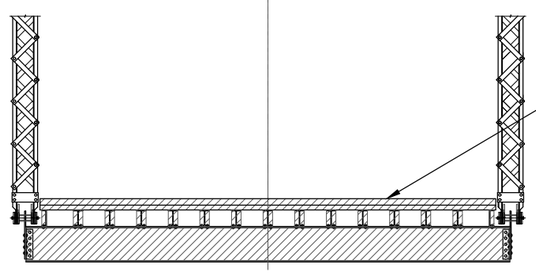

MDOT JOB 212097

REMOVE STEEL STRINGERS, STEEL DECKING, HMA OVERLAY AND RAILING. PAID FOR AS STRUCTURES, REHABILITATION, REM PORTIONS, SPECIAL

CROSS SECTION
NOT TO SCALE

NOTE: AS BUILT INFORMATION IS NOT AVAILABLE. EXTENT OF EXISTING FOUNDATIONS IS UNKNOWN. FIELD VERIFY CONDITIONS PRIOR TO CONSTRUCTION AND NOTIFY ENGINEER OF DIFFERING CONDITIONS. NO ADDITIONAL COST WILL BE INCURRED FOR DIFFERING CONDITIONS.

12/19/2024 3:57 PM austin.evans

FINAL PLAN REVISIONS			
NO.	DATE	AUTH	DESCRIPTION

Spicer group ©2024
SAGINAW OFFICE
230 S. Washington Ave.
Saginaw, MI 48607
Tel. 989-754-4717
Fax. 989-754-4440
www.SpicerGroup.com

VERT. (FT) 0 N/A
HORZ. (FT) 0 40

SGI PROJECT NO: 131018SG2021
DATE: DECEMBER, 2024
FILE: DB-1234- BRIDGEREMOVAL.DWG

CS: 56000
JN: 212097

REMOVAL DETAILS
BAILEY BRIDGE AT SMITHS CROSSING

DRAWING	SHEET
REMOVAL	30

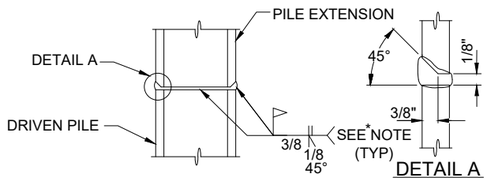

SPLICE DETAILS
FOR PILES IN PLACE (HORIZONTAL JOINT)

* BACK GOUGE AND GRIND EDGE PREPARATION SMOOTH

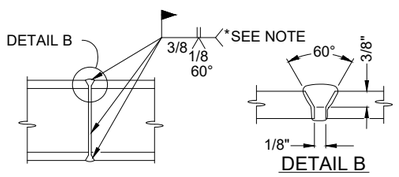

SPLICE DETAILS
FOR PILES IN HORIZONTAL POSITION

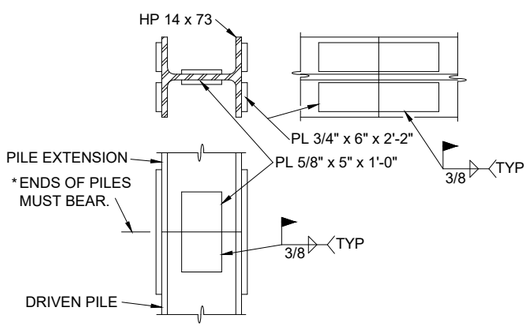

SPLICE DETAILS

*SET PILE EXTENSION IN PLACE WITH SPLICE PLATES ATTACHED, TAP SEVERAL TIMES WITH THE HAMMER TO IMPROVE BEARING CONTACT, THEN COMPLETE WELDING OF PLATES TO THE LOWER SECTION.

MISCELLANEOUS QUANTITIES

1		LSUM	Pile Driving Equipment, Furn
2135		Ft	Pile, Steel, Furn and Driven, 14 inch
2		Ea	Test Pile, Steel, 14 inch
54		Ea	Pile Point, Steel
20		Ea	Pile, Steel, Splice

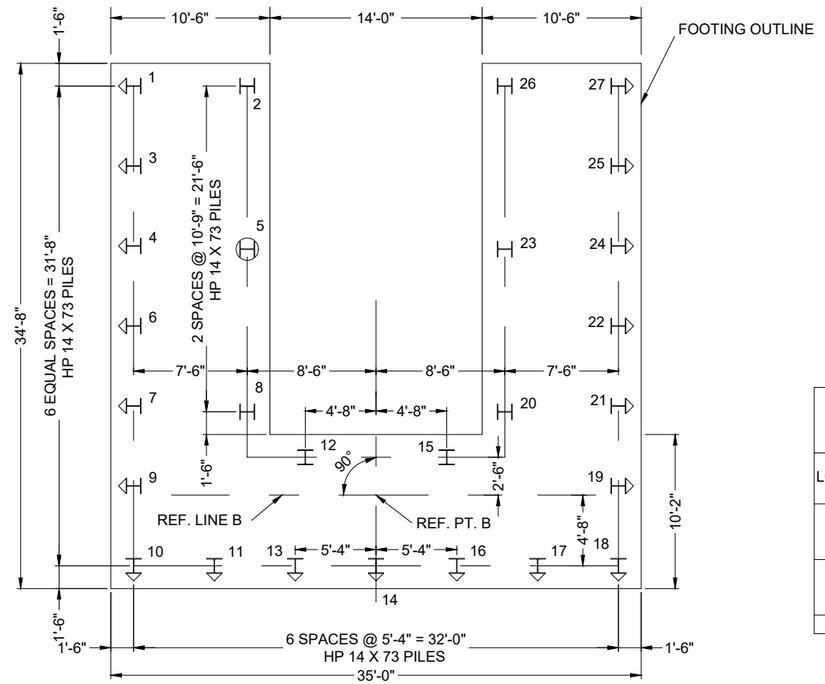

PILE LAYOUT - ABUTMENT A/B

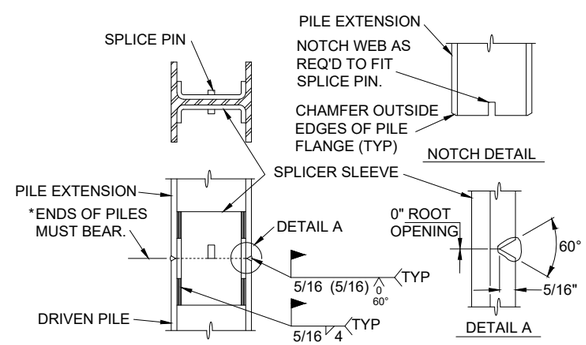

ALTERNATE SPLICE DETAILS

*SET PILE EXTENSION IN PLACE WITH SPLICE PLATES ATTACHED, TAP SEVERAL TIMES WITH THE HAMMER TO IMPROVE BEARING CONTACT, THEN COMPLETE WELDING OF PLATES TO THE LOWER SECTION.

460 KIP NOMINAL RESISTANCE HP 14 X 73 PILES							
LOCATION	PILE TYPE	NUMBER OF PILES	ESTIMATED LENGTH FURNISHED & DRIVEN		PILE POINTS (EACH)	SPLICES (EACH)	CUT-OFF ELEV.
			EACH LFT	TOTAL LFT			
ABUT A	TEST	1	60	60	1	1	589.6
	VERTICAL	7	50	350	7	-	589.6
	BATTERED	19	55	1045	19	19	589.6
ABUT B	TEST	1	30	30	1	-	589.6
	VERTICAL	7	25	175	7	-	589.6
	BATTERED	19	25	475	19	-	589.6
TOTAL		54		2135	54	20	

QUANTITIES ABOVE ARE FOR ESTIMATING PURPOSES ONLY. ACTUAL QUANTITIES FOR OPERATING PURPOSE SHOULD BE BASED ON THE ACTUAL PILE LENGTH REQUIRED FOR THE TEST PILES.

* CUTOFF ELEVATION OF ABUTMENT PILES MAY BE REDUCED BY UP TO 2' AT LOCATIONS WHERE INACCURACY OF DRIVEN PILE INTERFERES W/ REINF. STEEL. USE STEEL FOR H-PILES THAT HAS A YIELD STRENGTH NOT LESS THAN 50,000 PSI.

⊢ --DENOTES VERTICAL PILES.

⊢▷ --DENOTES BATTERED PILES.

Ⓗ --DENOTES VERTICAL TEST PILES.

STEEL PILES SHALL BE HP 14x73.

BATTER PILES FOR ABUTMENTS SHALL BE DRIVEN TO A 3V:1H BATTER ANGLE.

DRIVE ALL PILES TO A NOMINAL RESISTANCE NOT LESS THAN 400 KIPS. DETERMINE NOMINAL PILE DRIVING RESISTANCE (RNDC) USING THE MODIFIED GATES DYNAMIC FORMULA.

THE FACTORED PILE RESISTANCE AVAILABLE TO RESIST ALL FACTORED LOADS, INCLUDING THE ESTIMATED FACTORED DOWNDRAG, IS EQUAL TO 40 PERCENT OF NOMINAL PILE DRIVING RESISTANCE THAT IS REDUCED BY THE LOSS DUE TO SCOUR. (FOR INFORMATION ONLY)

THE ESTIMATED PILE LENGTH IS BASED ON THE STATIC FORMULA.

USE STEEL FOR H-PILES THAT HAVE A YIELD STRENGTH NOT LESS THAN 50,000 PSI.

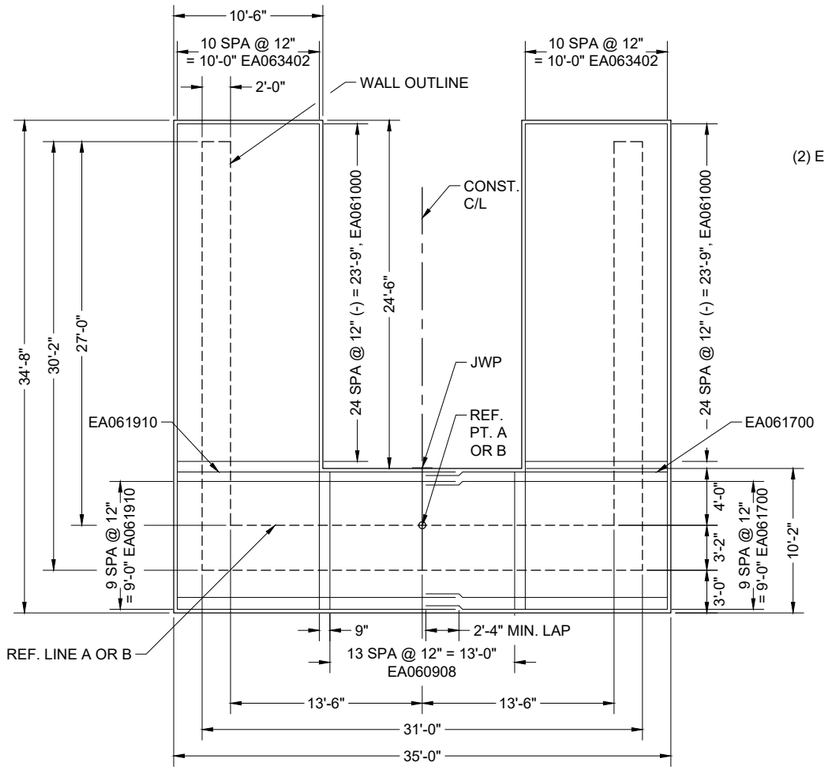

FOUNDATION PLAN (TOP REINFORCING STEEL)

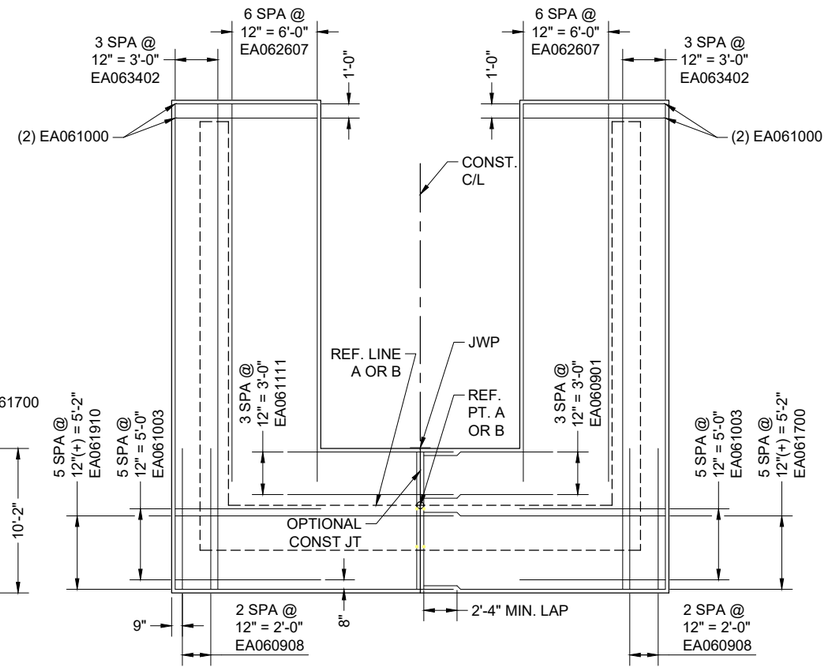

FOUNDATION PLAN (BOTTOM REINFORCING STEEL)

NOTES:

JWP DENOTES JOINT WATERPROOFING.

NS DENOTES NEAR SIDE.

FS DENOTES FAR SIDE.

ES DENOTES EACH SIDE.

FOR BEVEL AND MOLDING DETAILS, SEE STANDARD PLAN B-103 SERIES.

FOR PILE QUANTITIES, LAYOUT AND NOTES, SEE SHEET 31.

APPLY LOW TEMPERATURE PROTECTION OF CONCRETE ACCORDING TO SECTION 706.06 J OF THE STANDARD SPECIFICATIONS FOR CONSTRUCTION. LOW TEMPERATURE PROTECTION OF CONCRETE WILL BE INCLUDED IN THE BID ITEM "SUBSTRUCTURE CONC".

APPLY SUBSTRUCTURE HORIZONTAL SURFACE SEALER TO THE TOP HORIZONTAL SURFACE OF ABUTMENT A, B, AND PIER 1 AFTER THE ELASTOMERIC BEARINGS HAVE BEEN PLACED IN FINAL POSITION ON THE STRUCTURE. CLEAN ACCIDENTALLY COATED VERTICAL SURFACES AT THE CONTRACTOR'S EXPENSE.

APPLY PENETRATING WATER REPELLENT TREATMENT TO THE ENTIRE EXPOSED SURFACE OF ABUTMENT A, B, AND PIER 1 EXCEPT THE TOPS AND THE FRONT FACE OF INDEPENDENT BACKWALL AFTER THE NEW ELASTOMERIC BEARINGS HAVE BEEN PLACED IN FINAL POSITION ON THE STRUCTURE.

SUBSTRUCTURE CONCRETE QUANTITIES

POUR	ABUT A/B
A	48.4
B	48.4
C	26.9
D	41.9
E	41.9
F	26.9
G	1.6

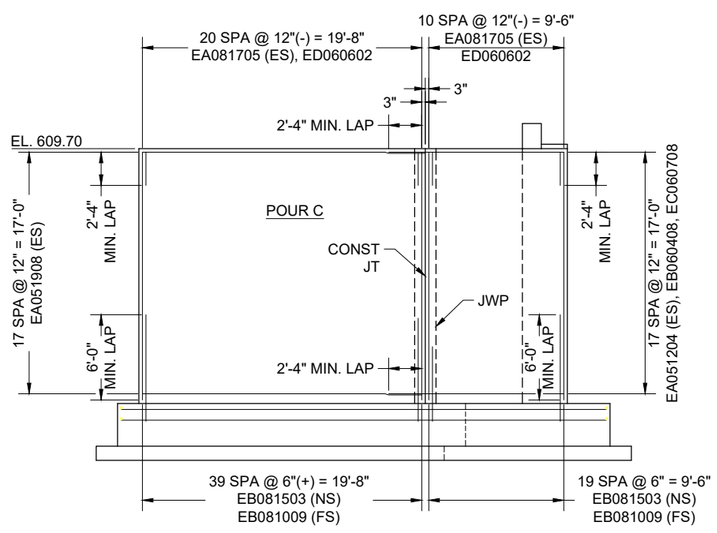

LEFT ELEVATION

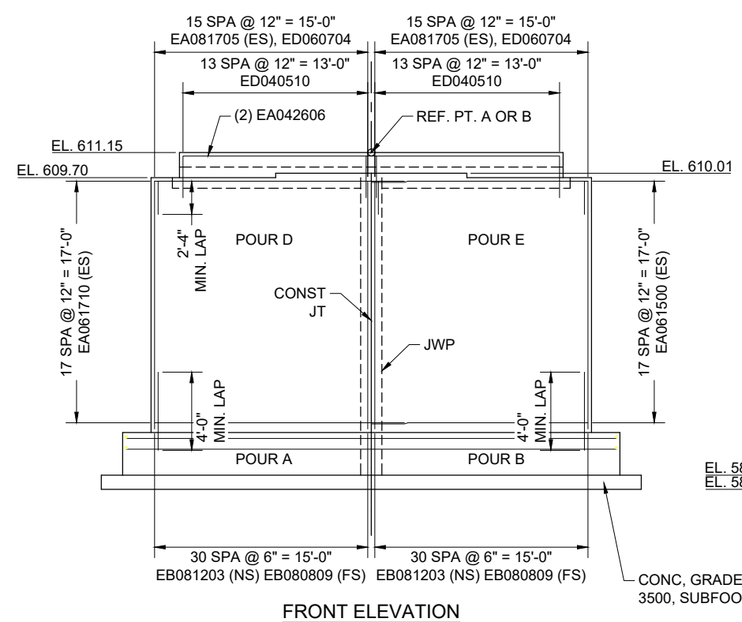

FRONT ELEVATION

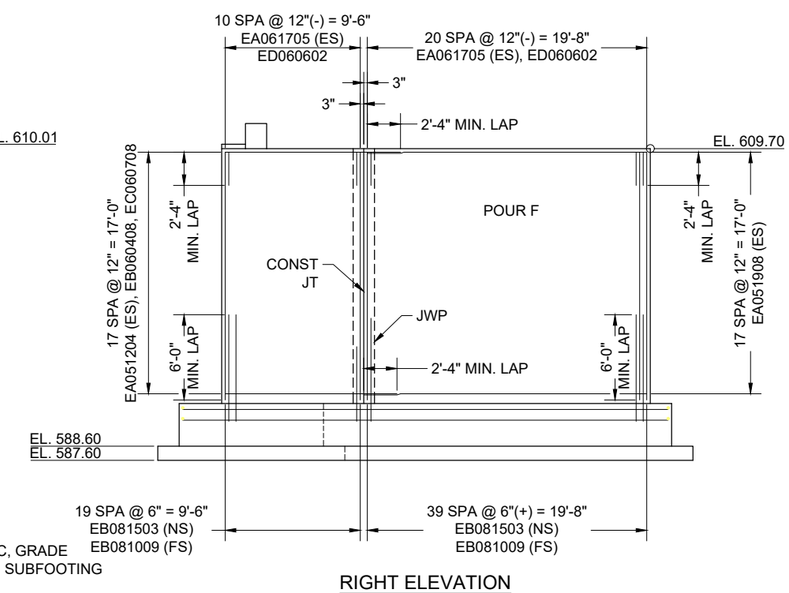

RIGHT ELEVATION

FINAL PLAN REVISIONS			
NO.	DATE	AUTH	DESCRIPTION

SAGINAW OFFICE
230 S. Washington Ave.
Saginaw, MI 48607
Tel. 989-754-4717
Fax. 989-754-4440
www.SpicerGroup.com

VERT. (FT) 0 N/A
HORZ. (FT) 0 N/A

SGI PROJECT NO: 131018SG2021
DATE: DECEMBER, 2024
FILE: DB-1234- ABUTMENTS A-B DETAILS.DWG

CS: 56000
JN: 212097

ABUTMENT A/B DETAIL
BAILEY BRIDGE AT SMITHS CROSSING

DRAWING: ABUT
SHEET: 32

12/19/2024 3:57 PM matthew.sopcak

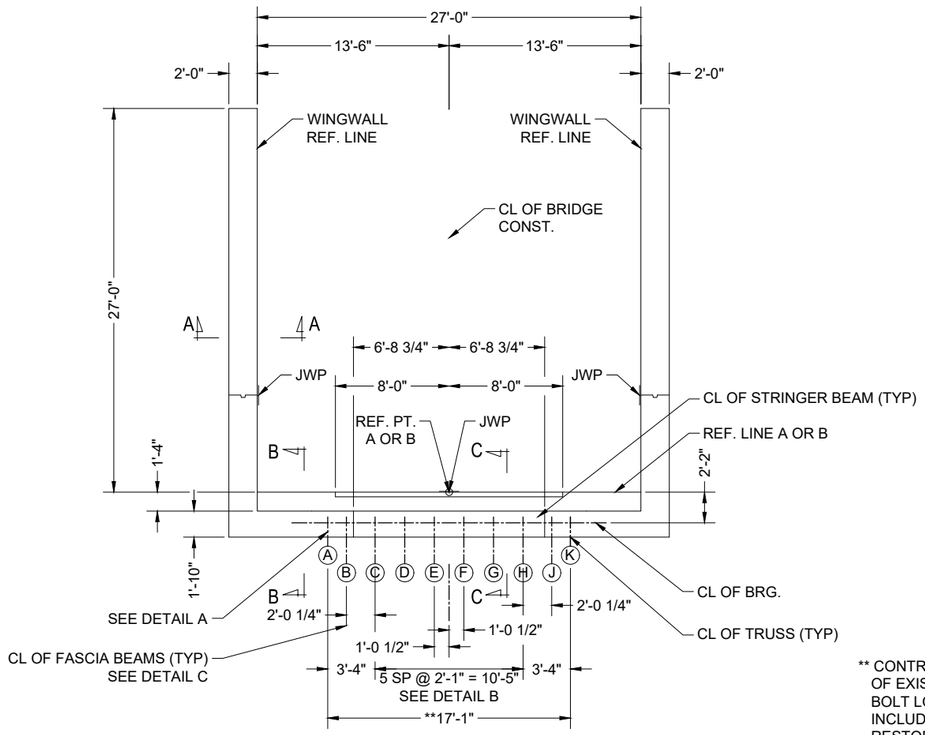

PLAN OF WALL

** CONTRACTOR SHALL TAKE FIELD MEASUREMENTS OF EXISTING TRUSS PRIOR TO SETTING ANCHOR BOLT LOCATION. FIELD MEASUREMENTS TO BE INCLUDED IN PAY ITEM STRUCTURAL STEEL, RESTORATION AND ERECT.

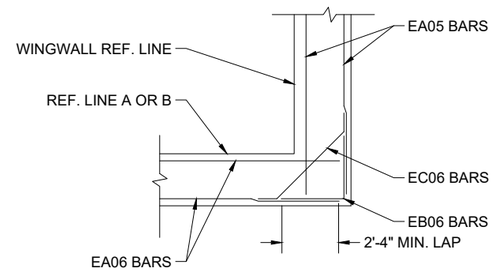

TYPICAL CORNER DETAIL

NOTES:

JWP DENOTES JOINT WATERPROOFING.

NS DENOTES NEAR SIDE.

FS DENOTES FAR SIDE.

ES DENOTES EACH SIDE.

FOR BEVEL AND MOLDING DETAILS, SEE STANDARD PLAN B-103 SERIES.

FOR PILE QUANTITIES, LAYOUT AND NOTES, SEE SHEET 31.

APPLY LOW TEMPERATURE PROTECTION OF CONCRETE ACCORDING TO SECTION 706.06 J OF THE STANDARD SPECIFICATIONS FOR CONSTRUCTION. LOW TEMPERATURE PROTECTION OF CONCRETE WILL BE INCLUDED IN THE BID ITEM "SUBSTRUCTURE CONC".

APPLY SUBSTRUCTURE HORIZONTAL SURFACE SEALER TO THE TOP HORIZONTAL SURFACE OF ABUTMENT A, B, AND PIER 1 AFTER THE ELASTOMERIC BEARINGS HAVE BEEN PLACED IN FINAL POSITION ON THE STRUCTURE. CLEAN ACCIDENTALLY COATED VERTICAL SURFACES AT THE CONTRACTOR'S EXPENSE.

APPLY PENETRATING WATER REPELLENT TREATMENT TO THE ENTIRE EXPOSED SURFACE OF ABUTMENT A, B, AND PIER 1 EXCEPT THE TOPS AND THE FRONT FACE OF INDEPENDENT BACKWALL AFTER THE NEW ELASTOMERIC BEARINGS HAVE BEEN PLACED IN FINAL POSITION ON THE STRUCTURE.

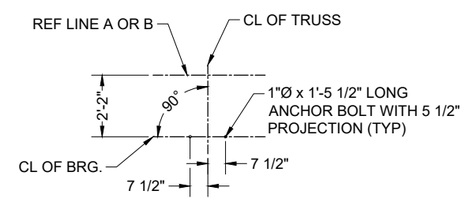

DETAIL A

(APPLY TO TRUSS LINES A AND K)

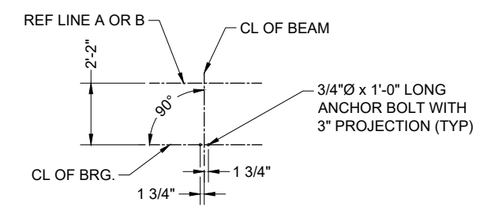

DETAIL B

(APPLY TO BEAM LINES C -H)

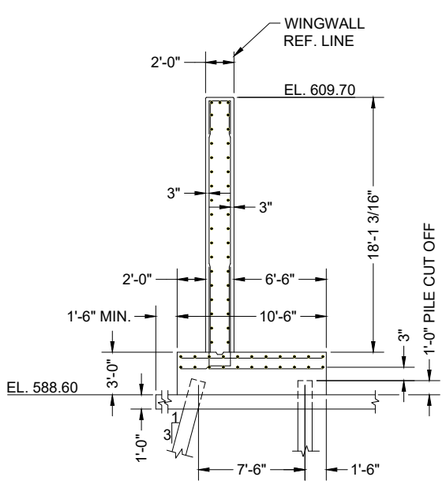

SECTION A-A

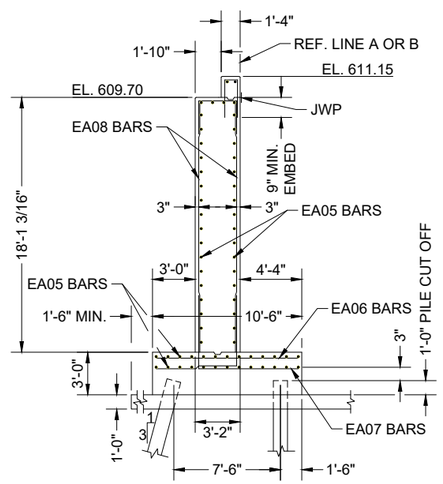

SECTION B-B

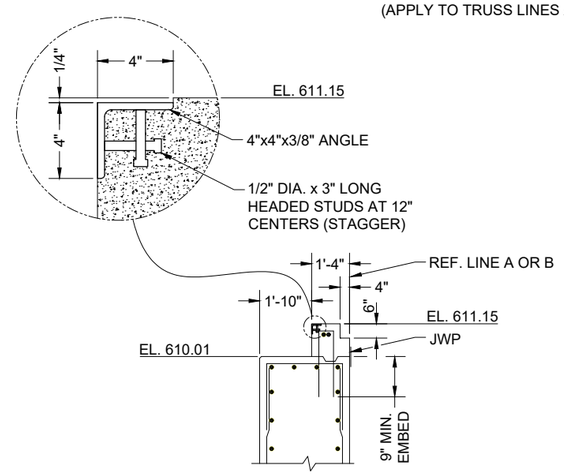

SECTION C-C

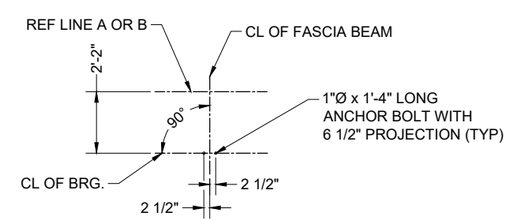

DETAIL C

(APPLY TO FASCIA BEAMS B AND J)

12/19/2024 3:57 PM matthew.sopcak

FINAL PLAN REVISIONS			
NO.	DATE	AUTH	DESCRIPTION

Spicer group
SAGINAW OFFICE
230 S. Washington Ave.
Saginaw, MI 48607
Tel. 989-754-4717
Fax. 989-754-4440
www.SpicerGroup.com

VERT. (FT) 0 N/A
HORZ. (FT) 0 N/A

SGI PROJECT NO: 131018SG2021
DATE: DECEMBER, 2024
FILE: DB-1234- ABUTMENTS A-B DETAILS2.DWG

CS: 56000
JN: 212097

ABUTMENT A-B DETAILS 2
BAILEY BRIDGE AT SMITHS CROSSING

DRAWING	SHEET
ABUT2	33

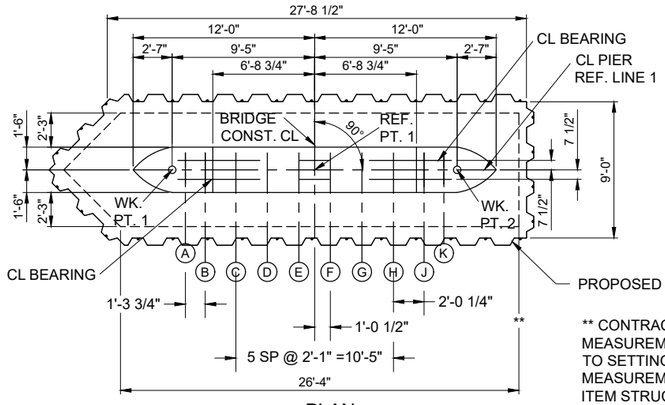

PLAN

** CONTRACTOR SHALL TAKE FIELD MEASUREMENTS OF EXISTING TRUSS PRIOR TO SETTING ANCHOR BOLT LOCATION. FIELD MEASUREMENTS TO BE INCLUDED IN PAY ITEM STRUCTURAL STEEL, RESTORATION AND ERECT.

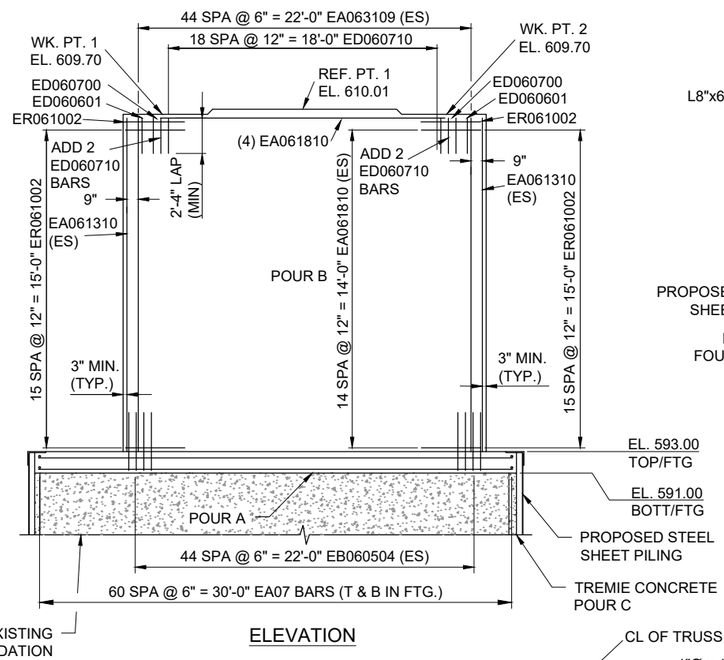

ELEVATION

SUBSTRUCTURE CONCRETE QUANTITIES	
POUR	PIER 1
A	20.0
B	41.9

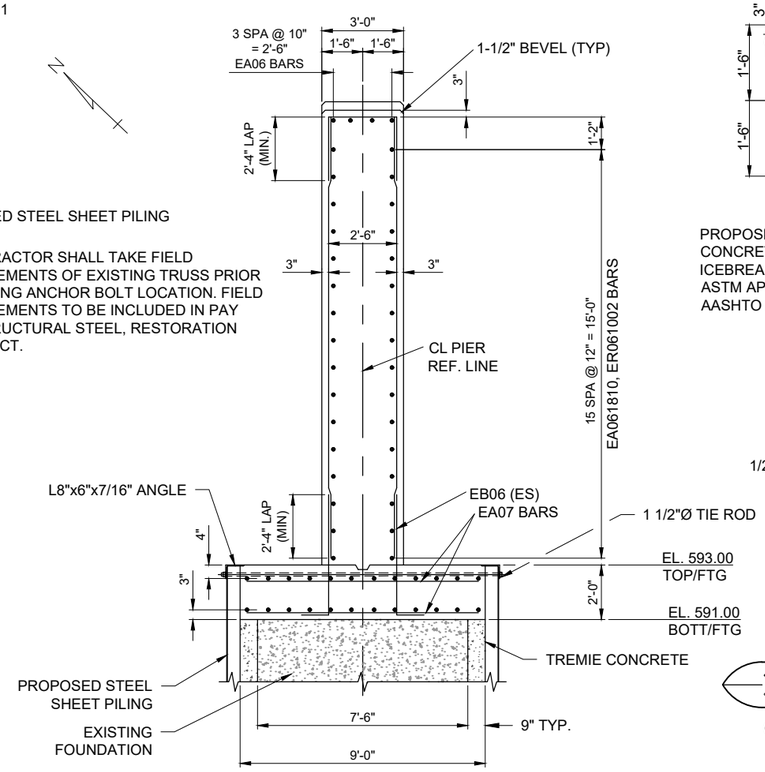

END VIEW

* AS BUILT INFORMATION IS NOT AVAILABLE. EXTENT OF EXISTING FOUNDATIONS IS UNKNOWN. FIELD VERIFY CONDITIONS PRIOR TO CONSTRUCTION AND NOTIFY ENGINEER OF DIFFERING CONDITIONS. NO ADDITIONAL COST WILL BE INCURRED FOR DIFFERING CONDITIONS.

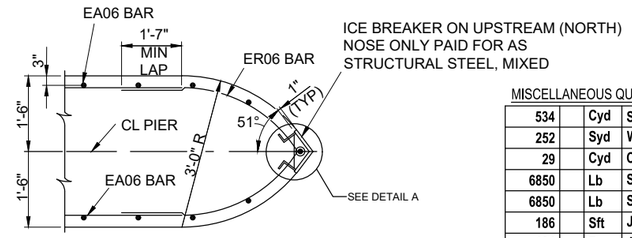

PIER NOSING DETAIL

PROPOSED ICEBREAKERS SHALL BE SET IN PLACE BEFORE POURING CONCRETE. MAKE A SMOOTH TRANSITION FROM FACE OF ICEBREAKER TO FACE OF WALL. ICEBREAKER SHALL BE MADE OF ASTM APPROVED STEEL AND HOT DIP GALVANIZED ACCORDING TO AASHTO M232.

MISCELLANEOUS QUANTITIES

534		Cyd	Substructure Conc
252		Syd	Water Repellent Treatment, Penetrating
29		Cyd	Conc, Grade 3500, Subfooting
6850		Lb	Structural Steel, Mixed, Erect
6850		Lb	Structural Steel, Mixed, Furn and Fab
186		Sft	Joint Waterproofing
104		Ea	Adhesive Anchoring of Vertical Bar, 3/4 inch
32		Ea	Adhesive Anchoring of Vertical Bar, 1 inch

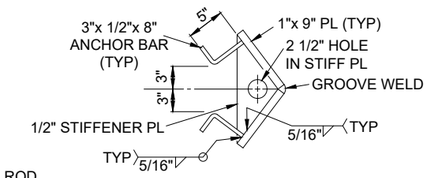

PIER NOSING DETAIL A

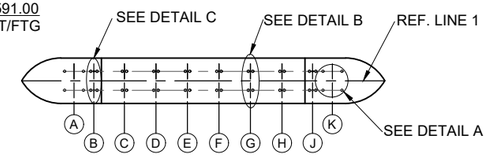

ANCHOR BOLT LAYOUT

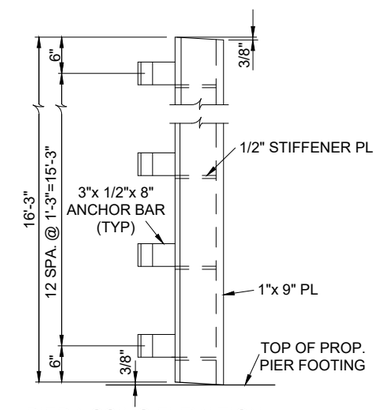

PIER NOSING ELEVATION

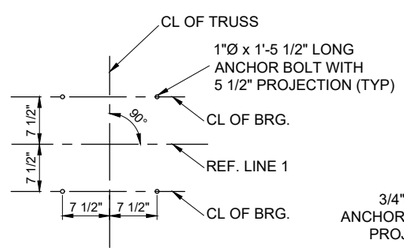

DETAIL A

(APPLY TO TRUSS LINES A AND K)

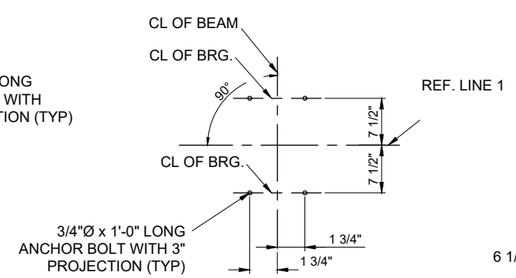

DETAIL B

(APPLY TO BEAM LINES C - H)

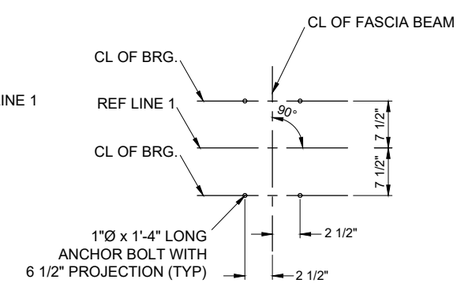

DETAIL C

(APPLY TO FASCIA BEAMS B AND J)

NOTES:

JWP DENOTES JOINT WATERPROOFING.

NS DENOTES NEAR SIDE.

FS DENOTES FAR SIDE.

ES DENOTES EACH SIDE.

FOR BEVEL AND MOLDING DETAILS, SEE STANDARD PLAN B-103 SERIES.

FOR PILE QUANTITIES, LAYOUT AND NOTES, SEE SHEET 27.

APPLY LOW TEMPERATURE PROTECTION OF CONCRETE ACCORDING TO SECTION 706.06 J OF THE STANDARD SPECIFICATIONS FOR CONSTRUCTION. LOW TEMPERATURE PROTECTION OF CONCRETE WILL BE INCLUDED IN THE BID ITEM "SUBSTRUCTURE CONC".

APPLY SUBSTRUCTURE HORIZONTAL SURFACE SEALER TO THE TOP HORIZONTAL SURFACE OF ABUTMENT A AND B AFTER THE ELASTOMERIC BEARINGS HAVE BEEN PLACED IN FINAL POSITION ON THE STRUCTURE. CLEAN ACCIDENTALLY COATED VERTICAL SURFACES AT THE CONTRACTOR'S EXPENSE.

APPLY PENETRATING WATER REPELLENT TREATMENT TO THE ENTIRE EXPOSED SURFACE OF ABUTMENT A AND B EXCEPT THE TOPS AND THE FRONT FACE OF INDEPENDENT BACKWALL AFTER THE NEW ELASTOMERIC BEARINGS HAVE BEEN PLACED IN FINAL POSITION ON THE STRUCTURE.

12/19/2024 3:57 PM matthew.sopcak

FINAL PLAN REVISIONS			
NO.	DATE	AUTH	DESCRIPTION

SAGINAW OFFICE
230 S. Washington Ave.
Saginaw, MI 48607
Tel. 989-754-4717
Fax. 989-754-4440
www.SpicerGroup.com

VERT. (FT) 0 N/A
HORZ. (FT) 0 N/A

SGI PROJECT NO: 131018SG2021
DATE: DECEMBER, 2024
FILE: DB-1234- PIER.DWG

CS: 56000
JN: 212097

PIER DETAILS
BAILEY BRIDGE AT SMITHS CROSSING

DRAWING	SHEET
PIER	34

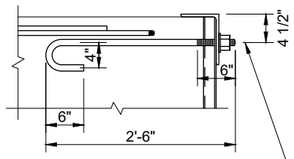

PLAN TO DETAIL D

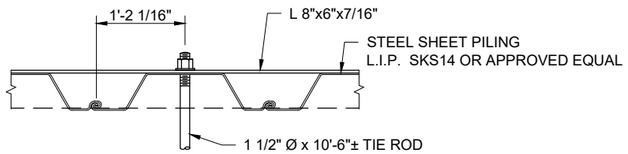

DETAIL E

ALSO SEE SECTION G-G

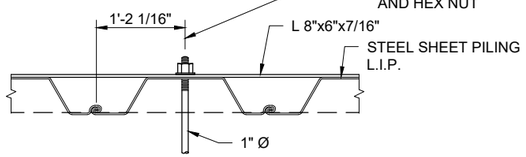

DETAIL D

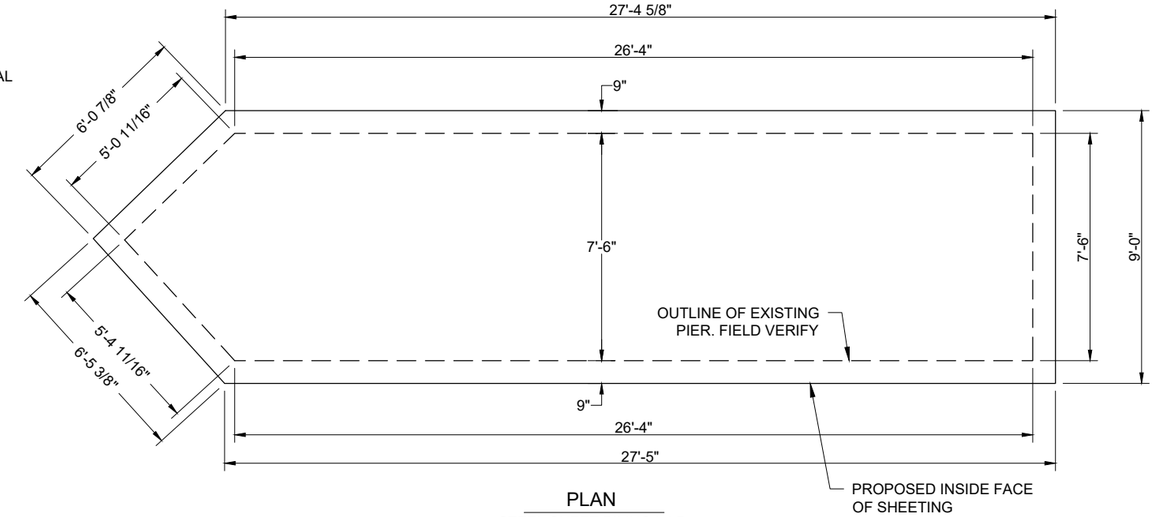

PLAN

STEEL SHEET PILING L.I.P.
& TREMIE CONCRETE

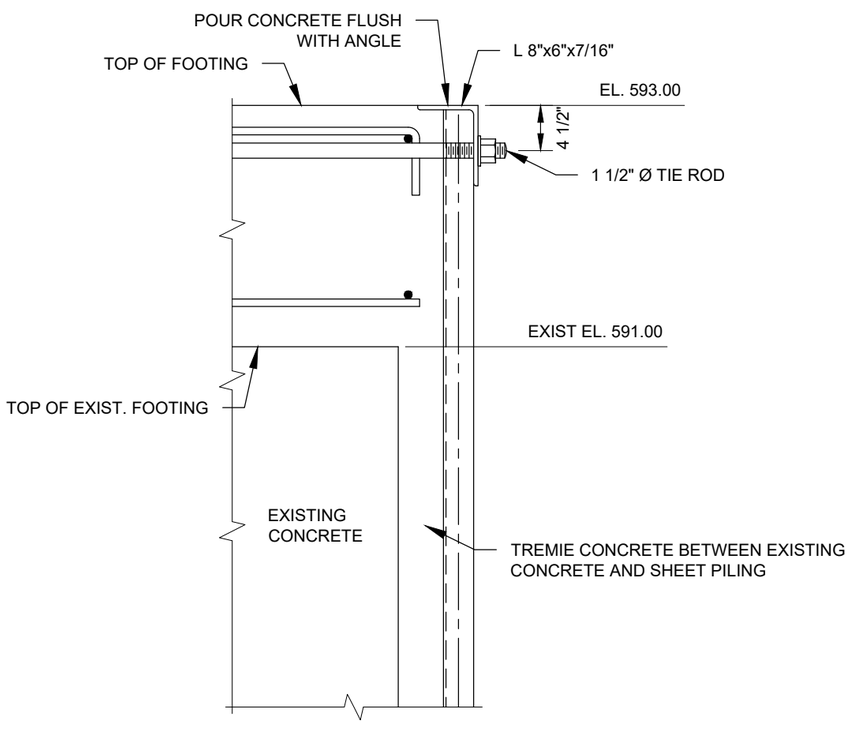

SECTION G-G

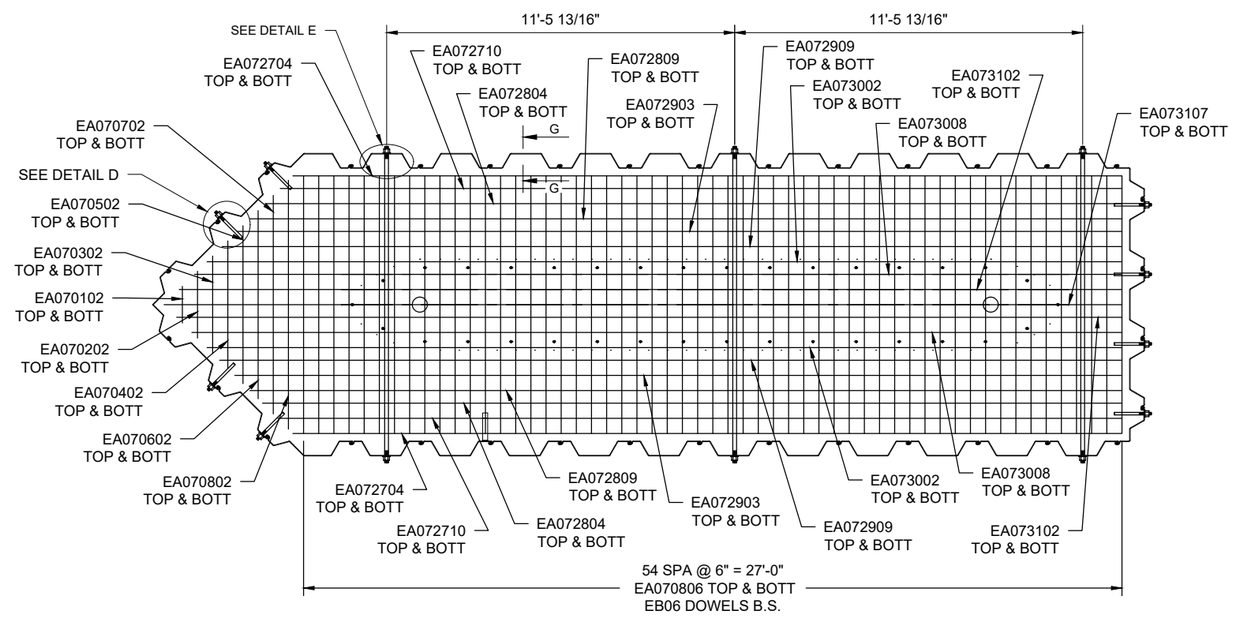

PLAN

FOOTING

12/19/2024 3:57 PM austin.evans

FINAL PLAN REVISIONS			
NO.	DATE	AUTH	DESCRIPTION

SAGINAW OFFICE
230 S. Washington Ave.
Saginaw, MI 48607
Tel. 989-754-4717
Fax. 989-754-4440
www.SpicerGroup.com

VERT. (FT) 0 N/A
HORZ. (FT) 0 N/A

SGI PROJECT NO: 131018SG2021
DATE: DECEMBER, 2024
FILE: DB-1234- PIER DETAILS.DWG

CS: 56000
JN: 212097

PIER DETAILS
BAILEY BRIDGE AT SMITHS CROSSING

DRAWING: PIER-DET
SHEET: 35

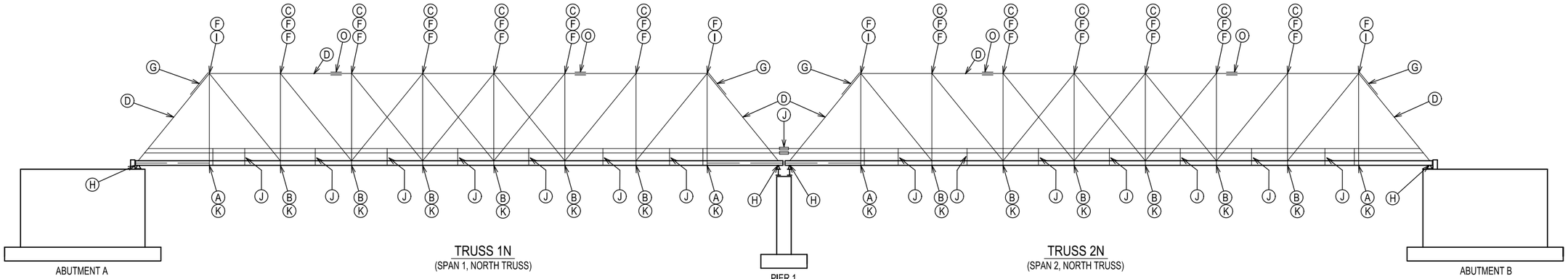

TRUSS 1N
(SPAN 1, NORTH TRUSS)

(E) - ESTIMATE 15 INDIVIDUAL LACING MEMBERS TO BE REPLACED PER TRUSS SECTION AS DIRECTED BY ENGINEER

(N) - ESTIMATE 2 INDIVIDUAL TRANSVERSE BRACE ANGLES TO BE REPLACED PER TRUSS SPAN AS DIRECTED BY ENGINEER.

(K) - ESTIMATE 4 LOWER BRACING RODS TO BE REPLACED PER TRUSS SPAN AS DIRECTED BY ENGINEER.

TRUSS 2N
(SPAN 2, NORTH TRUSS)

(E) - ESTIMATE 15 INDIVIDUAL LACING MEMBERS TO BE REPLACED PER TRUSS SECTION AS DIRECTED BY ENGINEER

(N) - ESTIMATE 2 INDIVIDUAL TRANSVERSE BRACE ANGLES TO BE REPLACED PER TRUSS SPAN AS DIRECTED BY ENGINEER.

(K) - ESTIMATE 4 LOWER BRACING RODS TO BE REPLACED PER TRUSS SPAN AS DIRECTED BY ENGINEER.

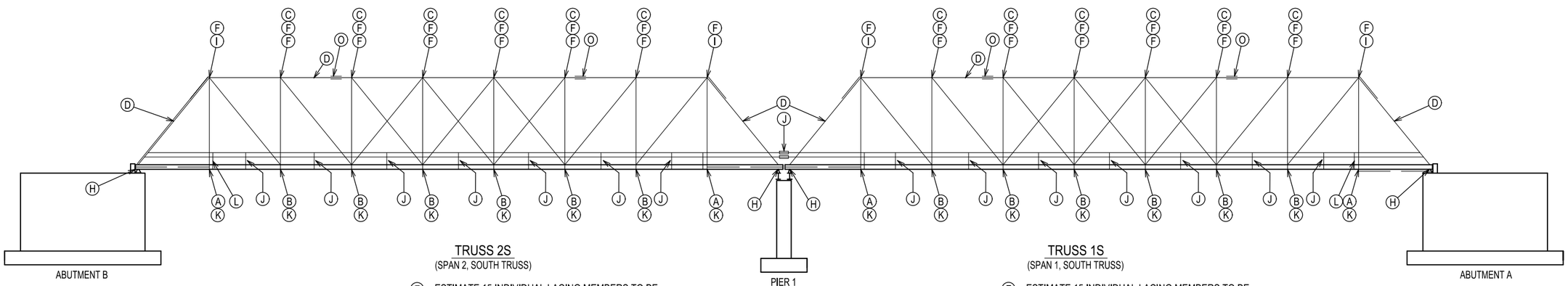

TRUSS 2S
(SPAN 2, SOUTH TRUSS)

(E) - ESTIMATE 15 INDIVIDUAL LACING MEMBERS TO BE REPLACED PER TRUSS SECTION AS DIRECTED BY ENGINEER

(N) - ESTIMATE 2 INDIVIDUAL TRANSVERSE BRACE ANGLES TO BE REPLACED PER TRUSS SPAN AS DIRECTED BY ENGINEER.

(K) - ESTIMATE 4 LOWER BRACING RODS TO BE REPLACED PER TRUSS SPAN AS DIRECTED BY ENGINEER.

TRUSS 1S
(SPAN 1, SOUTH TRUSS)

(E) - ESTIMATE 15 INDIVIDUAL LACING MEMBERS TO BE REPLACED PER TRUSS SECTION AS DIRECTED BY ENGINEER

(N) - ESTIMATE 2 INDIVIDUAL TRANSVERSE BRACE ANGLES TO BE REPLACED PER TRUSS SPAN AS DIRECTED BY ENGINEER.

(K) - ESTIMATE 4 LOWER BRACING RODS TO BE REPLACED PER TRUSS SPAN AS DIRECTED BY ENGINEER.

KEY
(X) - DENOTES REHABILITATION DETAIL

NOTES
ALL REMOVAL WORK RELATED TO THE REHABILITATION OF THE EXISTING TRUSSES SHALL BE INCLUDED IN STRUCTURES, REHABILITATION, REM PORTIONS, SPECIAL.

12/19/2024 3:57 PM austin.evans

FINAL PLAN REVISIONS			
NO.	DATE	AUTH	DESCRIPTION

Spicer group ©2024
SAGINAW OFFICE
230 S. Washington Ave.
Saginaw, MI 48607
Tel. 989-754-4717
Fax. 989-754-4440
www.SpicerGroup.com

VERT. (FT) 0 N/A
HORZ. (FT) 0 N/A

SGI PROJECT NO: 131018SG2021
DATE: DECEMBER, 2024
FILE: DB-1234- REHABPLAN.DWG

CS: 56000
JN: 212097

REHAB PLAN
BAILEY BRIDGE AT SMITHS CROSSING

DRAWING	SHEET
REHAB PLN	36

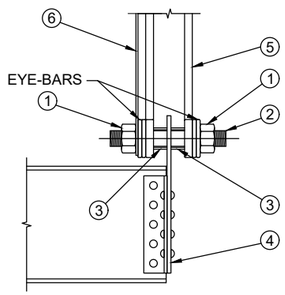

LOWER TRUSS END PIN DETAIL

DETAIL A

DETAIL A NOTES:

1. RECESSED NUT
   1. EXISTING RECESSED NUTS TO BE SALVAGED AND REUSED
   2. CLEAN BRIDGE PIN THREADS WITH HEAT AND WIRE BRUSH PRIOR TO REMOVING RECESSED NUT
   3. HEAT NUT WITH OXY FUEL TORCH
   4. REMOVE NUT WITH IMPACT WRENCH
   5. CONTRACTOR SHALL BE RESPONSIBLE FOR ANY DAMAGE CAUSED DURING REMOVAL.
2. TRUSS PIN (INCLUDED IN PAY ITEM STRUCTURAL STEEL, TRUSS PIN, 2 1/2 INCH DIA)
   1. EXISTING TRUSS PIN SHALL BE REMOVED AND REPLICATED USING EXISTING PIN AS TEMPLATE
   2. MACHINE THREADS TO MATCH EXISTING SALVAGED RECESS NUTS
   3. MATERIAL FOR NEW PIN SHALL BE STAINLESS STEEL
3. SPACER SLEEVES
   1. EXISTING SPACER SLEEVES SHALL BE REMOVED AND REPLICATED USING EXISTING SPACER SLEEVES AS TEMPLATE
   2. MATERIAL FOR NEW SPACER SLEEVES SHALL BE STAINLESS STEEL
4. FLOOR BEAM MOUNTING PLATE
   1. REMOVE PACK RUST BETWEEN PLATE AND BEAM CLIP ANGLES BY HEATING AND HAMMERING OR BY REMOVING RIVETS AND REASSEMBLING (SEE SPECIAL PROVISIONS)
   2. STRAIGHTEN EXISTING PLATE AS REQUIRED (SEE SPECIAL PROVISIONS)
   3. REPAIR EXISTING RIVET HOLES (AS REQUIRED) TO PROPER SIZE IN ORDER TO RECEIVE RIVETS
   4. REMOVE S15X50 FLOORBEAM AND REPLACE WITH A NEW S18X54.7 FLOORBEAM
   5. INSTALL RIVETS (SEE SPECIAL PROVISIONS)
5. VERTICAL HANGER RODS
   1. EXISTING VERTICAL HANGER RODS TO BE SALVAGED AND REUSED
   2. STRAIGHTEN EXISTING HANGER RODS AS REQUIRED (SEE SPECIAL PROVISIONS)
6. VERTICAL HANDRAIL BRACKET
   1. REMOVE

DETAIL A PHOTO

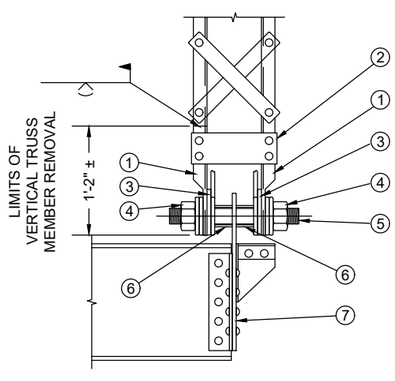

LOWER TRUSS PIN DETAIL

DETAIL B

DETAIL B NOTES:

1. VERTICAL TRUSS MEMBER (C5x6.7)
   1. SHORE TRUSS TO REMOVE STRESS IN MEMBERS
   2. ESTABLISH REFERENCE DIMENSION IN ORDER TO ACCURATELY RELOCATE SPLICED SECTION
   3. SAW-CUT VERTICAL TRUSS MEMBER TO LIMITS SHOWN
   4. FABRICATE NEW VERTICAL TRUSS MEMBER (C5x6.7) USING EXISTING MEMBER AS TEMPLATE
   5. WELD MEMBER IN PLACE WITH FULL PENETRATION WELD UTILIZING E7018 ELECTRODE
2. BATTEN PLATE
   1. EXISTING BATTEN PLATES TO BE SALVAGED AND REUSED
   2. REMOVE EXISTING RIVETS (SEE SPECIAL PROVISIONS)
   3. STRAIGHTEN EXISTING PLATE AS REQUIRED (SEE SPECIAL PROVISIONS)
   4. REPAIR EXISTING RIVET HOLES (AS REQUIRED) TO PROPER SIZE IN ORDER TO RECEIVE RIVETS
   5. INSTALL RIVETS (SEE SPECIAL PROVISIONS)
3. BUSHING PLATE
   1. FABRICATE NEW BUSHING PLATE USING EXISTING PLATE AS TEMPLATE
   2. CONNECT BUSHING PLATE TO NEW SPLICED VERTICAL TRUSS MEMBER AS TO MATCH EXISTING
4. RECESSED NUT
   1. EXISTING RECESSED NUTS TO BE SALVAGED AND REUSED
   2. CLEAN BRIDGE PIN THREADS WITH HEAT AND WIRE BRUSH PRIOR TO REMOVING RECESSED NUT
   3. HEAT NUT WITH OXY FUEL TORCH
   4. REMOVE NUT WITH IMPACT WRENCH
5. TRUSS PIN (INCLUDED IN PAY ITEM STRUCTURAL STEEL, TRUSS PIN, 2 1/2 INCH DIA)
   1. EXISTING TRUSS PIN SHALL BE REMOVED AND REPLICATED USING EXISTING PIN AS TEMPLATE
   2. MACHINE THREADS TO MATCH EXISTING SALVAGED RECESS NUTS
   3. MATERIAL FOR NEW PIN SHALL BE STAINLESS STEEL
6. SPACER SLEEVES
   1. EXISTING SPACER SLEEVES SHALL BE REMOVED AND REPLICATED USING EXISTING SPACER SLEEVES AS TEMPLATE
   2. MATERIAL FOR NEW SPACER SLEEVES SHALL BE STAINLESS STEEL
7. FLOOR BEAM MOUNTING PLATE
   1. REMOVE PACK RUST BETWEEN PLATE AND BEAM CLIP ANGLES BY HEATING AND HAMMERING OR BY REMOVING RIVETS AND REASSEMBLING (SEE SPECIAL PROVISIONS)
   2. STRAIGHTEN EXISTING PLATE AS REQUIRED (SEE SPECIAL PROVISIONS)
   3. REPAIR EXISTING RIVET HOLES (AS REQUIRED) TO PROPER SIZE IN ORDER TO RECEIVE RIVETS
   4. REMOVE S15X50 FLOORBEAM AND REPLACE WITH A NEW S18X54.7 FLOORBEAM
   5. INSTALL NEW RIVETS (SEE SPECIAL PROVISIONS)

DETAIL B PHOTO

12/19/2024 3:57 PM austin.evans

FINAL PLAN REVISIONS			
NO.	DATE	AUTH	DESCRIPTION

Spicer group ©2024

SAGINAW OFFICE
230 S. Washington Ave.
Saginaw, MI 48607
Tel. 989-754-4717
Fax. 989-754-4440
www.SpicerGroup.com

VERT. (FT) 0 N/A
HORZ. (FT) 0 N/A

SGI PROJECT NO: 131018SG2021
DATE: DECEMBER, 2024
FILE: DB-1234- REHABDETAILS1A.DWG

CS: 56000
JN: 212097

REHAB DETAIL 1A
BAILEY BRIDGE AT SMITHS CROSSING

DRAWING	SHEET
RHAB D1A	37

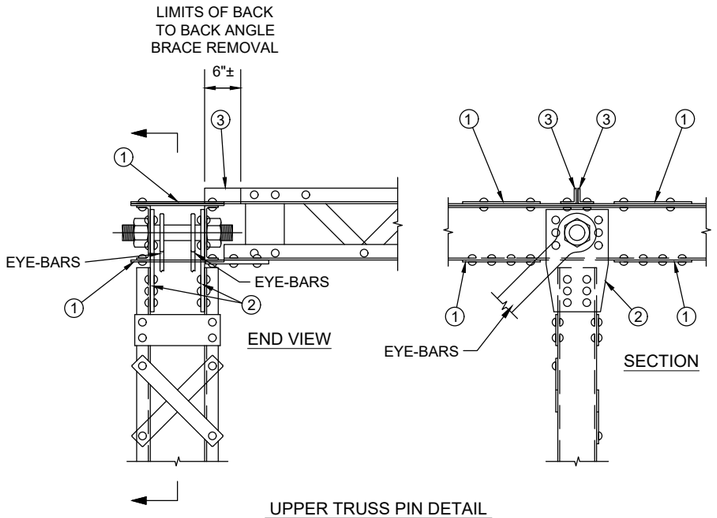

UPPER TRUSS PIN DETAIL

DETAIL C

DETAIL C NOTES:

1. TOP AND BOTTOM UPPER CHORD SPLICE PLATES
   1. EXISTING SPLICE PLATES TO BE REMOVED AND REPLICATED
   2. REMOVE EXISTING RIVETS (SEE SPECIAL PROVISIONS)
   3. FABRICATE NEW SPLICE PLATES USING EXISTING PLATE AS TEMPLATE
   4. REPAIR EXISTING RIVET HOLES (AS REQUIRED) TO PROPER SIZE IN ORDER TO RECEIVE RIVETS
   5. INSTALL NEW RIVETS (SEE SPECIAL PROVISIONS)
2. TOP CHORD TIE PLATES
   1. REMOVE PACK RUST BETWEEN TIE PLATES AND VERTICAL AND HORIZONTAL CHANNEL TRUSS MEMBERS BY HEATING AND HAMMERING OR BY REMOVING RIVETS AND REASSEMBLY (SEE SPECIAL PROVISIONS)
   2. STRAIGHTEN EXISTING PLATE AS REQUIRED (SEE SPECIAL PROVISIONS)
   3. REPAIR EXISTING RIVET HOLES (AS REQUIRED) TO PROPER SIZE IN ORDER TO RECEIVE RIVETS
   4. INSTALL NEW RIVETS (SEE SPECIAL PROVISION)
3. ANGLE BRACING
   1. SHORE TRUSS TO REMOVE STRESS IN MEMBERS
   2. SAW-CUT ANGLE BRACING TO LIMITS SHOWN
   3. FABRICATE NEW BRACING USING EXISTING MEMBER AS TEMPLATE
   4. SPLICE MEMBER IN PLACE WITH FULL PENETRATION WELD UTILIZING E7018 ELECTRODE
   5. REPAIR EXISTING BOLT HOLES (AS REQUIRED) TO PROPER SIZE IN ORDER TO RECEIVE BOLT
   6. INSTALL NEW BOLTS (SEE SPECIAL PROVISIONS)

DETAIL C PHOTO

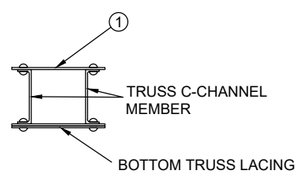

TRUSS UPPER CHORD TOP PLATE DETAIL

DETAIL D

DETAIL D NOTES:

1. TRUSS UPPER CHORD TOP PLATE AND INCLINED POST TOP PLATE (1/4" x 14" <)
   1. ALL EXISTING TRUSS TOP PLATES AND INCLUDED END POST TOP PLATE ARE TO BE REMOVED AND REPLACED
   2. REMOVE EXISTING RIVETS (SEE SPECIAL PROVISIONS)
   3. FABRICATE NEW TOP PLATES USING EXISTING PLATES AS TEMPLATE
   4. REPAIR EXISTING RIVET HOLES (AS REQUIRED) TO PROPER SIZE IN ORDER TO RECEIVE RIVETS
   5. INSTALL NEW RIVETS (SEE SPECIAL PROVISIONS

DETAIL D PHOTO

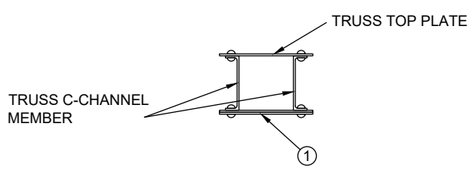

TRUSS LACING DETAIL

DETAIL E

DETAIL E NOTES:

1. TRUSS LACING (1/4" x 2")
   1. EXISTING TRUSS LACING MEMBER TO BE REMOVED AND REPLICATED
   2. REMOVE EXISTING RIVETS (SEE SPECIAL PROVISIONS)
   3. FABRICATE NEW LACING USING EXISTING AS TEMPLATE
   4. REPAIR EXISTING RIVET HOLES (AS REQUIRED) TO PROPER SIZE IN ORDER TO RECEIVE RIVETS
   5. INSTALL NEW RIVETS (SEE SPECIAL PROVISIONS)

DETAIL E PHOTO

12/19/2024 3:57 PM austin.evans

FINAL PLAN REVISIONS			
NO.	DATE	AUTH	DESCRIPTION

SAGINAW OFFICE
230 S. Washington Ave.
Saginaw, MI 48607
Tel. 989-754-4717
Fax. 989-754-4440
www.SpicerGroup.com

VERT. (FT) 0 N/A
HORZ. (FT) 0 N/A

SGI PROJECT NO: 131018SG2021
DATE: DECEMBER, 2024
FILE: DB-1234- REHABDETAILS1B.DWG

CS: 56000
JN: 212097

REHAB DETAIL 1B
BAILEY BRIDGE AT SMITHS CROSSING

DRAWING: RHAB D1B
SHEET: 38

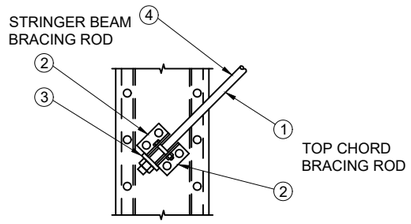

TOP VIEW

TRUSS TOP CHORD LATERAL BRACING DETAIL

DETAIL F

DETAIL F NOTES:

1 TOP CHORD BRACING ROD
1. EXISTING BRACE ROD SHALL BE REMOVED AND REPLICATED USING EXISTING ROD AS TEMPLATE

2 BRACING ANGLE BRACKET
1. EXISTING ANGLE BRACKETS SHALL BE REMOVED AND REPLICATED USING EXISTING ANGLE BRACKET AS TEMPLATE OR HEAT STRAIGHTENED IF APPROVED BY ENGINEER.
2. REMOVE EXISTING RIVETS (SEE SPECIAL PROVISIONS)
3. REPAIR EXISTING RIVET HOLES (AS REQUIRED) TO PROPER SIZE IN ORDER TO RECEIVE RIVETS
4. INSTALL NEW RIVETS (SEE SPECIAL PROVISIONS)
5. INSTALL GALVANIZED BOLT AND NUT AS TO SECURE LATERAL BRACING IN PLACE (SEE DETAIL)

3 WASHER PLATE
1. EXISTING WASHER PLATE SHALL BE REMOVED AND REPLICATED USING EXISTING WASHER PLATE AS TEMPLATE

DETAIL F PHOTO

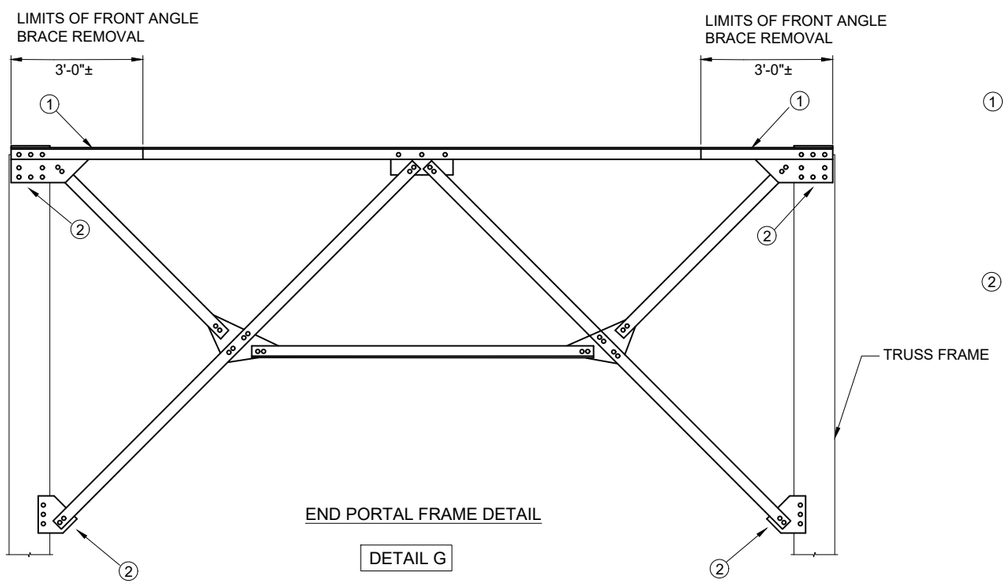

END PORTAL FRAME DETAIL

DETAIL G

DETAIL G NOTES:

1 TOP VERTICAL ANGLE FRAME MEMBER
1. SHORE TRUSS TO REMOVE STRESS IN MEMBERS
2. SAW-CUT ANGLE BRACING TO LIMITS SHOWN
3. FABRICATE NEW BRACING USING EXISTING MEMBER AS TEMPLATE
4. SPLICE MEMBER IN PLACE WITH FULL PENETRATION WELD UTILIZING E7018 ELECTRODE
5. REPAIR EXISTING RIVET HOLES (AS REQUIRED) TO PROPER SIZE IN ORDER TO RECEIVE RIVETS
6. INSTALL NEW RIVETS (SEE SPECIAL PROVISIONS)

2 FRAME CONNECTION
1. REMOVE PACK RUST BETWEEN CONNECTING MEMBERS BY HEATING AND HAMMERING OR BY REMOVING RIVETS AND REASSEMBLE (SEE SPECIAL PROVISIONS)
2. STRAIGHTEN EXISTING PLATE AS REQUIRED (SEE SPECIAL PROVISIONS)
3. REPAIR EXISTING RIVET HOLES (AS REQUIRED) TO PROPER SIZE IN ORDER TO RECEIVE RIVETS
4. INSTALL NEW RIVETS (SEE SPECIAL PROVISIONS)

DETAIL G PHOTO

12/19/2024 3:57 PM austin.evans

FINAL PLAN REVISIONS			
NO.	DATE	AUTH	DESCRIPTION

SAGINAW OFFICE
230 S. Washington Ave.
Saginaw, MI 48607
Tel. 989-754-4717
Fax. 989-754-4440
www.SpicerGroup.com

VERT. (FT) 0 N/A
HORZ. (FT) 0 N/A

SGI PROJECT NO: 131018SG2021
DATE: DECEMBER, 2024
FILE: DB-1234- REHABDETAILS2A.DWG

CS: 56000
JN: 212097

REHAB DETAILS 2A
BAILEY BRIDGE AT SMITHS CROSSING

DRAWING: RHAB D2A
SHEET: 39

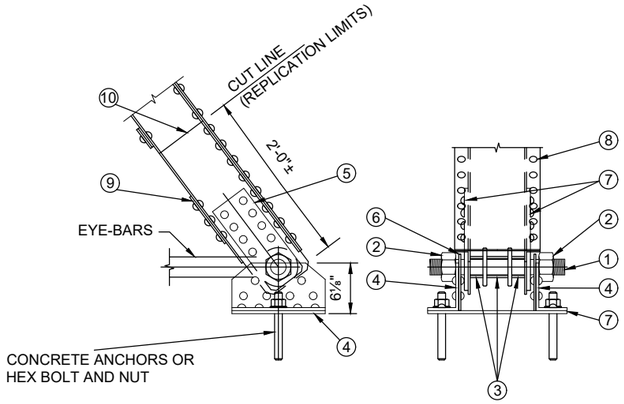

TRUSS BEARING DETAIL

DETAIL H

DETAIL H NOTES:

① TRUSS PIN
1. EXISTING TRUSS PIN SHALL BE REMOVED AND REPLICATED USING EXISTING PIN AS TEMPLATE
2. MACHINE THREADS TO MATCH EXISTING SALVAGED RECESS NUTS
3. MATERIAL FOR NEW PIN SHALL BE STAINLESS STEEL

② RECESSED NUT
1. EXISTING RECESSED NUTS TO BE SALVAGED AND REUSED
2. CLEAN BRIDGE PIN THREADS WITH HEAT AND WIRE BRUSH PRIOR TO REMOVING RECESSED NUT
3. HEAT NUT WITH OXY FUEL TORCH
4. REMOVE NUT WITH IMPACT WRENCH
5. CONTRACTOR SHALL BE RESPONSIBLE FOR ANY DAMAGE CAUSED DURING REMOVAL.

③ SPACER SLEEVES
1. EXISTING SPACER SLEEVES SHALL BE REMOVED AND REPLICATED USING EXISTING SPACER SLEEVES AS TEMPLATE
2. MATERIAL FOR NEW SPACER SLEEVES SHALL BE STAINLESS STEEL

④ PIN BRACKET
1. EXISTING PIN BRACKET SHALL BE REMOVED AND REPLICATED USING EXISTING PIN BRACKET AS TEMPLATE

⑤ TRUSS BUSHING PLATE
1. FABRICATE NEW BUSHING PLATE USING EXISTING PLATE AS TEMPLATE
2. REMOVE EXISTING RIVETS (SEE SPECIAL PROVISIONS)
3. REPAIR EXISTING RIVET HOLES (AS REQUIRED) TO PROPER SIZE IN ORDER TO RECEIVE RIVETS
4. INSTALL NEW RIVETS. CONNECT BUSHING PLATE TO NEW SPLICED VERTICAL TRUSS MEMBER AS TO MATCH EXISTING (SEE SPECIAL PROVISIONS)

⑥ BEARING BUSHING PLATE
1. FABRICATE NEW BUSHING PLATE USING EXISTING PLATE AS TEMPLATE
2. REMOVE EXISTING RIVETS (SEE SPECIAL PROVISIONS)
3. REPAIR EXISTING RIVET HOLES (AS REQUIRED) TO PROPER SIZE IN ORDER TO RECEIVE RIVETS
4. INSTALL NEW RIVETS CONNECTING NEW BUSHING PLATE TO NEW PIN BRACKET (SEE SPECIAL PROVISIONS)

⑦ BEARING PLATE (3/8"x12"x16")
1. EXISTING BEARING PLATE SHALL BE REMOVED AND REPLICATED USING EXISTING BEARING PLATE AS TEMPLATE

⑧ TOP PLATE RIVETS
1. EXISTING TOP PLATE TO BE REMOVED AND REPLICATED (SEE REHABILITATION DETAIL D)
2. REMOVE EXISTING RIVETS (SEE SPECIAL PROVISIONS)
3. REPAIR EXISTING RIVET HOLES (AS REQUIRED) TO PROPER SIZE IN ORDER TO RECEIVE RIVETS
4. INSTALL NEW RIVETS AFTER INCLINED END POST HAS BEEN SPLICED.

⑨ BATTEN PLATE
1. EXISTING BATTEN PLATES TO BE SALVAGED AND REUSED EXCEPT AT EAST END OF SPAN #2 WHICH SHALL BE REPLACED AT BOTH NORTH AND SOUTH TRUSS
2. REMOVE EXISTING RIVETS (SEE SPECIAL PROVISIONS)
3. STRAIGHTEN EXISTING PLATE AS REQUIRED (SEE SPECIAL PROVISIONS)
4. REPAIR EXISTING RIVET HOLES (AS REQUIRED) TO PROPER SIZE IN ORDER TO RECEIVE RIVETS INSTALL NEW RIVETS (SEE SPECIAL PROVISIONS)

⑩ INCLINED END POST C-CHANNEL
1. SHORE TRUSS TO REMOVE STRESS IN MEMBERS
2. ESTABLISH REFERENCE DIMENSION IN ORDER TO ACCURATELY RELOCATE SPLICED SECTION
3. CUT INCLINED END POST C-CHANNEL WITH CUTTING METHOD THAT WILL ENSURE A STRAIGHT CLEAN CUT.
4. FABRICATE NEW INCLINED END POST MEMBER (C5x6.7) USING EXISTING MEMBER AS TEMPLATE
5. WELD MEMBER IN PLACE WITH FULL PENETRATION WELD UTILIZING E7018 ELECTRODE
6. REASSEMBLE TRUSS LACING, TOP PLATE AND BATTEN PLATE

DETAIL H PHOTO

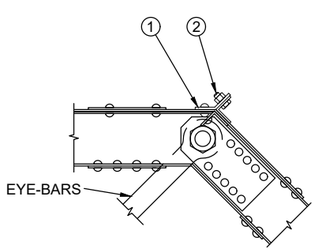

DIAGONAL END POST CONNECTION PLATE DETAIL

DETAIL I

DETAIL I NOTES:

① DIAGONAL END POST CONNECTION PLATE
1. EXISTING CONNECTION PLATE TO BE SALVAGED AND REUSED
2. REMOVE PACK RUST BETWEEN TOP CHORD PLATE AND CONNECTION PLATE BY HEATING AND HAMMERING OR BY REMOVING RIVETS AND REASSEMBLY (SEE SPECIAL PROVISIONS)
3. STRAIGHTEN EXISTING PLATE AS REQUIRED (SEE SPECIAL PROVISIONS)
4. REPAIR EXISTING RIVET HOLES (AS REQUIRED) TO PROPER SIZE IN ORDER TO RECEIVE RIVETS
5. INSTALL RIVETS (SEE SPECIAL PROVISIONS)

② EXISTING HEX HEAD BOLT AND NUT
1. REPLACE EXISTING HEX HEAD BOLT AND NUT WITH TORQUE CONTROL BOLT. TORQUE CONTROL BOLT SHALL HAVE "BUTTON HEAD" AS TO SIMULATE A RIVET HEAD.

DETAIL I PHOTO

12/19/2024 3:57 PM austin.evans

FINAL PLAN REVISIONS			
NO.	DATE	AUTH	DESCRIPTION

SAGINAW OFFICE
230 S. Washington Ave.
Saginaw, MI 48607
Tel. 989-754-4717
Fax. 989-754-4440
www.SpicerGroup.com

VERT. (FT) 0 N/A
HORZ. (FT) 0 N/A

SGI PROJECT NO: 131018SG2021
DATE: DECEMBER, 2024
FILE: DB-1234- REHABDETAILS2B.DWG

CS: 56000
JN: 212097

REHAB DETAILS 2B
BAILEY BRIDGE AT SMITHS CROSSING

DRAWING: RHAB D2B
SHEET: 40

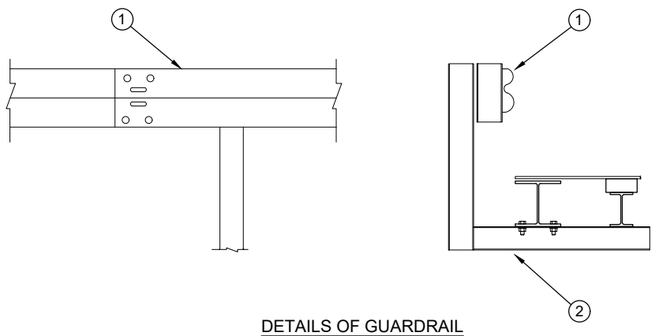

DETAILS OF GUARDRAIL

DETAIL J

DETAIL J NOTES

1. REMOVE EXISTING GUARDRAIL

2. GUARD RAIL SUPPORT
   1. REMOVE EXISTING GUARDRAIL SUPPORTS (14 EACH SPAN)

DETAIL J PHOTO

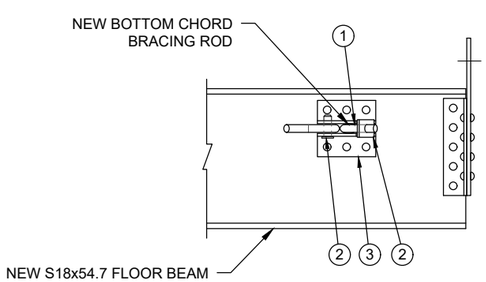

FLOOR BEAM BOTTOM CHORD BRACING ROD DETAIL

DETAIL K

DETAIL K NOTES

1. BOTTOM CHORD BRACING ROD
   1. EXISTING BRACE ROD SHALL BE REMOVED AND REUSED OR REPLICATED USING EXISTING ROD AS TEMPLATE AS DIRECTED BY ENGINEER.

2. BRACING ROD PIN
   1. BRACING ROD PIN TO BE REMOVED AND REPLICATED USING EXISTING PIN AS TEMPLATE OR REUSED IF APPROVED BY ENGINEER.
   2. REMOVE EXISTING BRACING ROD IN ADJACENT BAY.
   3. INSTALLED ROD PIN IN BRACKET IN FLOOR BEAM.

3. BRACING ANGLE BRACKET
   1. EXISTING ANGLE BRACKET SHALL BE REMOVED AND REPLICATED USING EXISTING ANGLE BRACKET AS TEMPLATE OR HEAT STRAIGHTENED IF APPROVED BY ENGINEER.
   2. INSTALL ANGLE BRACKETS ON NEW S18x54.7 FLOOR BEAM WITH NEW RIVETS.

4. WASHER PLATE
   1. EXISTING WASHER PLATE SHALL BE REMOVED AND REPLICATED USING EXISTING WASHER PLATE AS TEMPLATE.

12/19/2024 3:57 PM austin.evans

FINAL PLAN REVISIONS			
NO.	DATE	AUTH	DESCRIPTION

SAGINAW OFFICE
230 S. Washington Ave.
Saginaw, MI 48607
Tel. 989-754-4717
Fax. 989-754-4440
www.SpicerGroup.com

VERT. (FT) 0 N/A
HORZ. (FT) 0 N/A

SGI PROJECT NO: 131018SG2021
DATE: DECEMBER, 2024
FILE: DB-1234- REHABDETAILS3A.DWG

CS: 56000
JN: 212097

REHAB DETAILS 3A
BAILEY BRIDGE AT SMITHS CROSSING

DRAWING: RHAB D3A
SHEET: 41

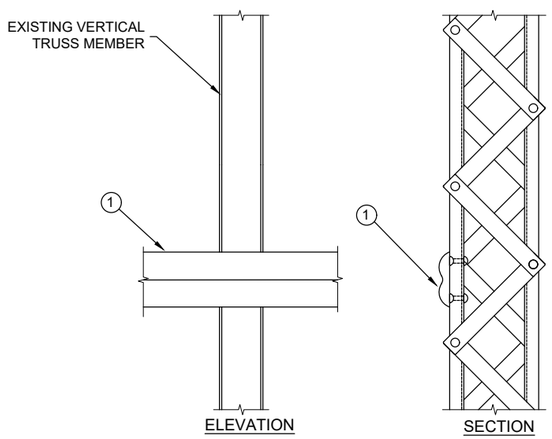

DETAILS AT VERTICAL TRUSS MEMBER

DETAIL L

DETAIL L NOTES

1. REMOVE EXISTING GUARDRAIL

DETAIL L PHOTO

12/19/2024 3:57 PM austin.evans

FINAL PLAN REVISIONS			
NO.	DATE	AUTH	DESCRIPTION

SAGINAW OFFICE
230 S. Washington Ave.
Saginaw, MI 48607
Tel. 989-754-4717
Fax. 989-754-4440
www.SpicerGroup.com

VERT. (FT) 0 N/A
HORZ. (FT) 0 N/A

SGI PROJECT NO: 131018SG2021
DATE: DECEMBER, 2024
FILE: DB-1234- REHABDETAILS3B.DWG

CS: 56000
JN: 212097

REHAB DETAILS 3B
BAILEY BRIDGE AT SMITHS CROSSING

DRAWING	SHEET
RHAB D3B	42

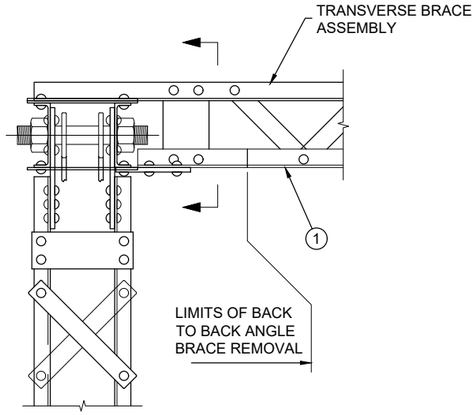

ELEVATION

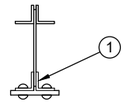

SECTION

TOP CHORD TRANSVERSE BRACE DETAIL

DETAIL N

DETAIL N
REHABILITATION NOTES

1 ANGLE BRACING
1. SHORE TRUSS TO REMOVE STRESS IN MEMBERS
2. SAW-CUT ANGLE BRACING TO LIMITS SHOWN
3. FABRICATE NEW BRACING USING EXISTING MEMBER AS TEMPLATE
4. SPLICE MEMBER IN PLACE WITH FULL PENETRATION WELD UTILIZING E7018 ELECTRODE
5. REPAIR EXISTING RIVET HOLES (AS REQUIRED) TO PROPER SIZE IN ORDER TO RECEIVE RIVETS
6. INSTALL NEW RIVETS (SEE SPECIAL PROVISIONS)

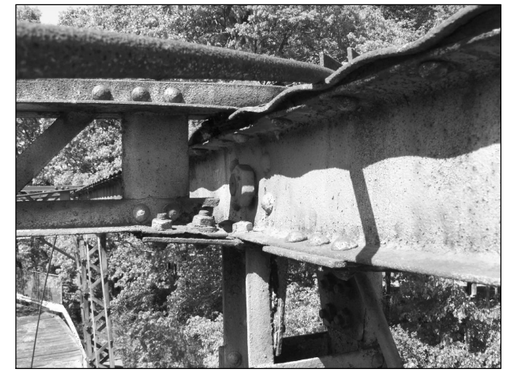

DETAIL N PHOTO

MISCELLANEOUS QUANTITIES

1		LSUM	Structural Steel, Restoration and Erect
26500		Lb	Structural Steel, Furn and Fab, Special
36		Ea	Structural Steel, Truss Pin, 2 1/2 inch dia
1		LSUM	Steel, Structure, Cleaning, Type 4 (B02 of 56999)
1		LSUM	Steel, Structure, Coating, Type 4 (B02 of 56999)

NOTES:

STEEL SURFACES EXPOSED DURING REHABILITATION SHALL HAVE PROPER SURFACE PREPARATION AND BE COATED WITH PRIME COAT PER STANDARD SPECIFICATIONS PRIOR TO ASSEMBLY.

THIS BRIDGE IS COATED WITH LEAD BASED PAINT.

SEE SUBSECTION 715 OF THE STANDARD SPECIFICATIONS FOR PROTECTION OF WORK AND ENVIRONMENT DURING BLAST CLEANING OF STRUCTURES

THE ESTIMATED AREA OF STRUCTURAL STEEL TO BE COATED IS 10267 SQUARE FEET.

THE COLOR OF THE URETHANE PROTECTIVE COAT SHALL BE BLACK. FEDERAL STANDARD 595B COLOR NUMBER 27038.

BLAST CLEAN AND PRIME FAYING SURFACES PRIOR TO RIVETING. THIS WORK IS INCLUDED IN THE PAY ITEMS FOR CLEANING AND COATING EXISTING STRUCTURAL STEEL.

PROTECT PORTIONS OF THE STRUCTURE, INCLUDING SUPERSTRUCTURES, SUBSTRUCTURE, SLOPE PROTECTION, AND HIGHWAY APPURTENANCES FROM SPLATTER AND OVERSPRAY OF COATING MATERIAL. INCLUDED IN BID ITEM "STEEL STRUCTURE, COATING, TYPE 4 (B02 of 56999)".

THE ENGINEER WILL INSPECT THE STRUCTURAL STEEL PARTS THAT HAVE BEEN BLAST CLEANED FOR EVIDENCE OF CRACKS OR LOSS OF SECTION DUE TO CORROSION OF MORE THAN 25 PERCENT. THE ENGINEER WILL REPORT DETERIORATION IN WRITING TO THE REGION BRIDGE ENGINEER.

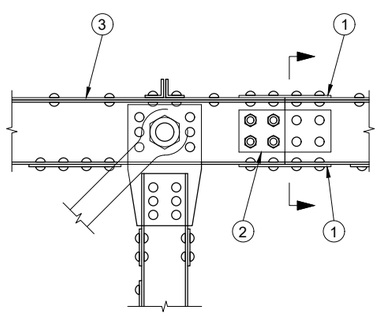

END VIEW

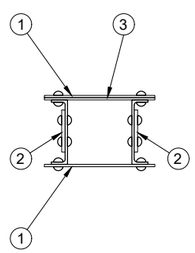

SECTION

UPPER TRUSS CHORD SPLICE DETAIL

DETAIL O

DETAIL O
REHABILITATION NOTES

1 UPPER AND LOWER TOP CHORD SPLICE PLATES
1. EXISTING SPLICE PLATES TO BE REMOVED AND REPLICATED
2. REMOVE EXISTING RIVETS (SEE SPECIAL PROVISIONS)
3. FABRICATE NEW SPLICE PLATES USING EXISTING PLATE AS TEMPLATE
4. REPAIR EXISTING RIVET HOLES (AS REQUIRED) TO PROPER SIZE IN ORDER TO RECEIVE RIVETS
5. INSTALL NEW RIVETS (SEE SPECIAL PROVISIONS)

2 TOP CHORD WEB SPLICE PLATES
1. EXISTING WEB SPLICE PLATES TO REMAIN IN POSITION

3 TRUSS TOP CHORD PLATE
1. SEE DETAIL SHEET 38, DETAIL D

DETAIL O PHOTO

12/19/2024 3:58 PM garrett.everitt

FINAL PLAN REVISIONS			
NO.	DATE	AUTH	DESCRIPTION

SAGINAW OFFICE
230 S. Washington Ave.
Saginaw, MI 48607
Tel. 989-754-4717
Fax. 989-754-4440
www.SpicerGroup.com

VERT. (FT) 0 N/A
HORZ. (FT) 0 N/A

SGI PROJECT NO: 131018SG2021
DATE: DECEMBER, 2024
FILE: DB-1234- REHABDETAILS4B.DWG

CS: 56000
JN: 212097

REHAB DETAILS 4B
BAILEY BRIDGE AT SMITHS CROSSING

DRAWING: RHAB D4B
SHEET: 43

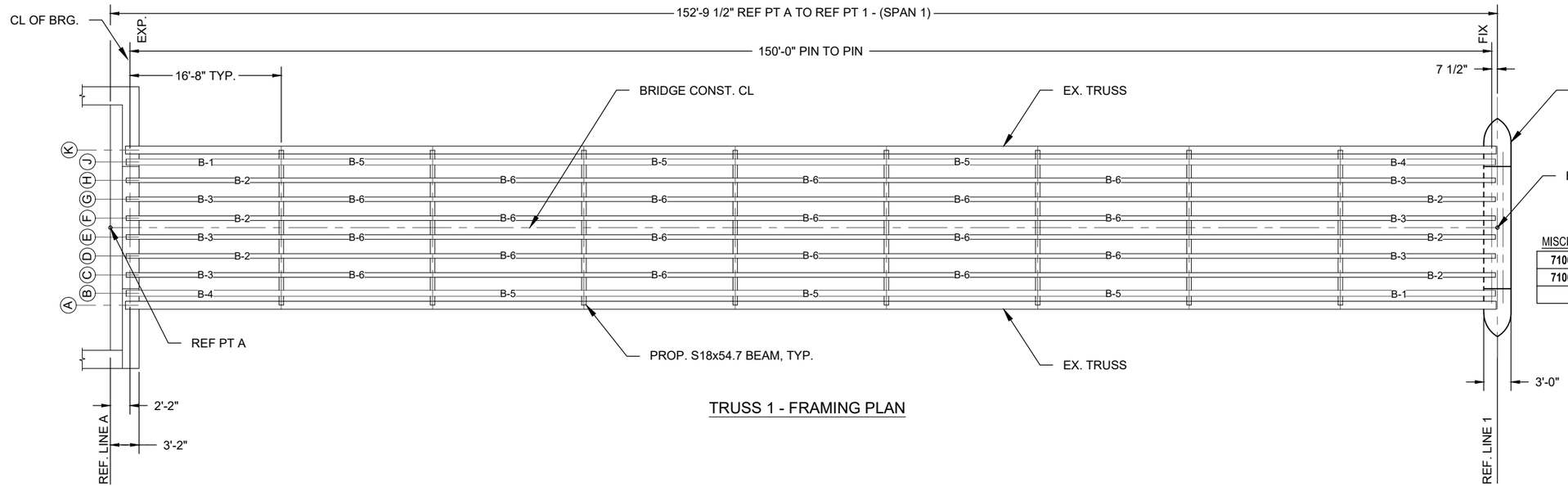

TRUSS 1 - FRAMING PLAN

MISCELLANEOUS QUANTITIES

71000	Lb	Structural Steel, Rolled Shape, Erect
71000	Lb	Structural Steel, Rolled Shape, Furn and Fab
1	LSUM	Field Repr of Damaged Coating (B02 of 56999)

* CONTRACTOR SHALL TAKE FIELD MEASUREMENTS OF EXISTING TRUSS PRIOR TO SETTING ANCHOR BOLT LOCATION. FIELD MEASUREMENTS TO BE INCLUDED IN PAY ITEM STRUCTURAL STEEL, RESTORATION AND ERECT.

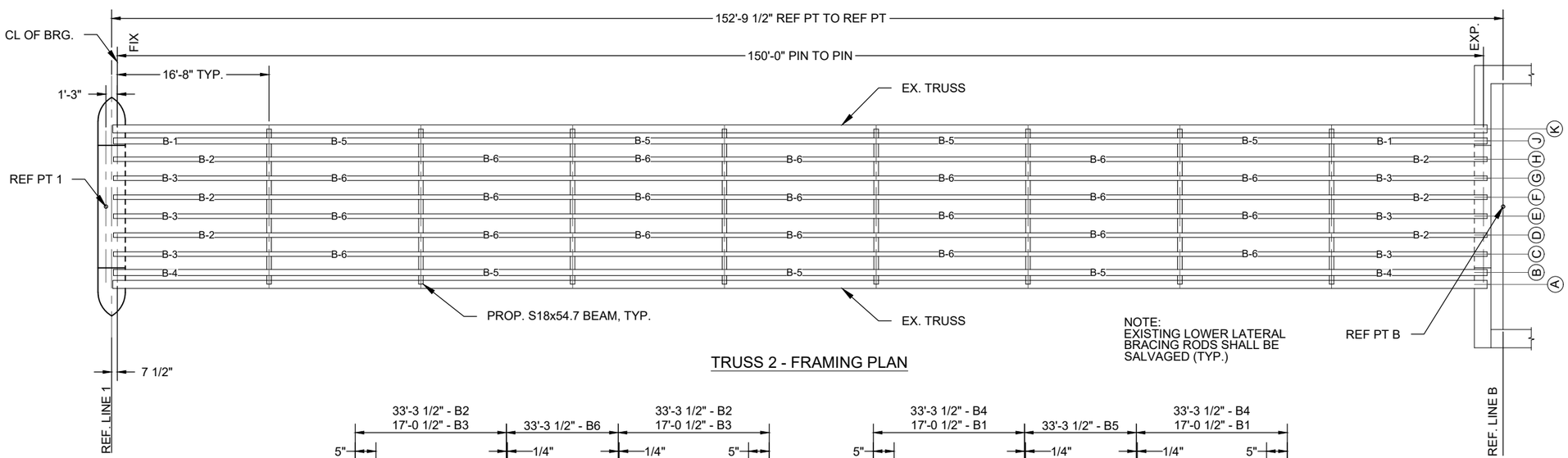

TRUSS 2 - FRAMING PLAN

NOTE:
EXISTING LOWER LATERAL BRACING RODS SHALL BE SALVAGED (TYP.)

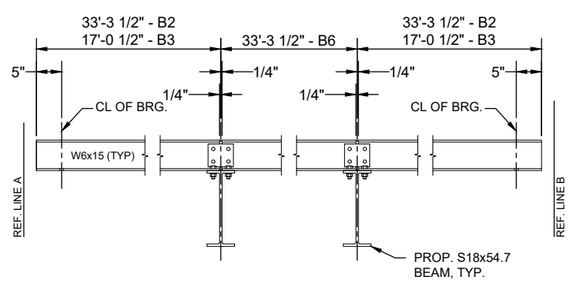

TYPICAL STRINGER BEAM ELEVATION

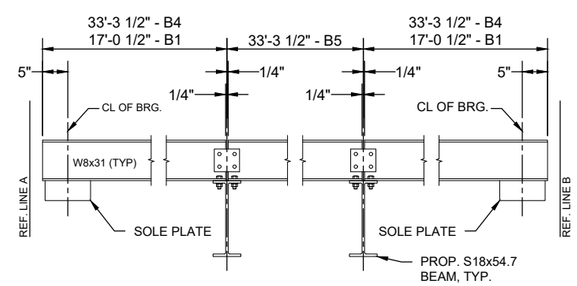

TYPICAL FASCIA BEAM ELEVATION

NOTES

ALL ANCHOR BOLTS SHALL BE HOT-DIP GALVANIZED.

ALL STRUCTURAL STEEL SHALL BE COATED ACCORDING TO SUBSECTION 716 OF THE STANDARD SPECIFICATIONS. THE COLOR OF THE URETHANE PROTECTIVE COAT SHALL BE BLACK. FEDERAL STANDARD 595B COLOR NUMBER 27038.

STRUCTURAL STEEL SHALL CONFORM TO AASHTO M270, GRADE 50, OR AASHTO M270, GRADE 50W.

POSITION DOWELS SHALL BE HOT-DIP GALVANIZED ACCORDING TO AASHTO M 232. POSITION DOWELS ARE INCLUDED IN PAYMENT FOR STRUCTURAL STEEL, FURNISH AND FAB, SPECIAL.

FABRICATION OF NEW LOWER LATERAL BRACING ROD SHALL BE INCLUDED IN
PAY ITEM "Structural Steel, Furnish and Fab. Special".

INSTALLATION OF NEW LOWER LATERAL BRACING ROD SHALL BE INCLUDED IN
PAY ITEM "Structural Steel, Restoration and Erect".

FIELD CONNECTIONS SHALL BE BOLTED WITH 3/4" HIGH STRENGTH BOLTS. (EXCEPT AS NOTED)

12/19/2024 3:58 PM garrett.everitt

FINAL PLAN REVISIONS			
NO.	DATE	AUTH	DESCRIPTION

SAGINAW OFFICE
230 S. Washington Ave.
Saginaw, MI 48607
Tel. 989-754-4717
Fax. 989-754-4440
www.SpicerGroup.com

VERT. (FT) 0 N/A
HORZ. (FT) 0 N/A

SGI PROJECT NO: 131018SG2021
DATE: DECEMBER, 2024
FILE: DB-1234- STRUCTURALSTEELDETAILS1.DWG

CS: 56000
JN: 212097

STRUCTURAL STEEL DETAILS-1
BAILEY BRIDGE AT SMITHS CROSSING

DRAWING: STRUCT 1
SHEET: 44

MISCELLANEOUS QUANTITIES

1224	Sin	Bearing, Elastomeric, 1 inch
1520	Sin	Bearing, Elastomeric, 2 1/2 inch

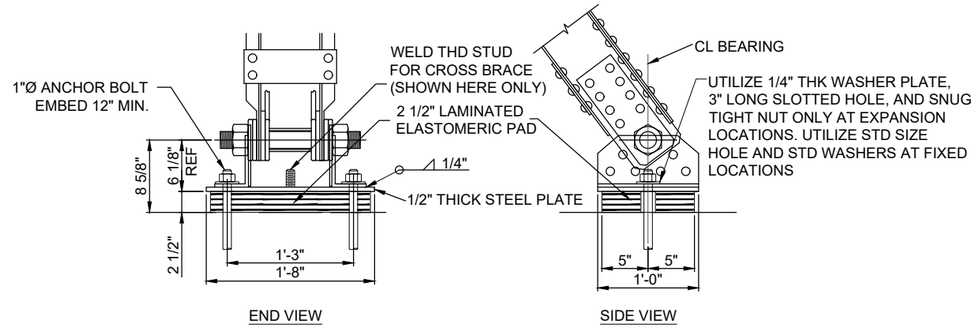

TRUSS BEARING

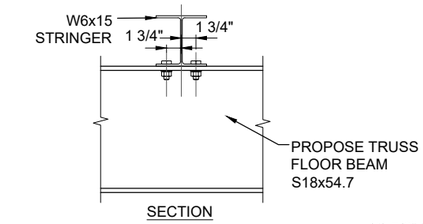

SECTION

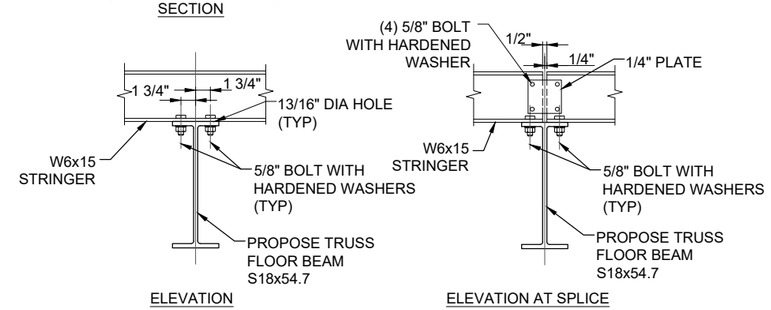

ELEVATION

ELEVATION AT SPLICE

STRINGER BEAM TO FLOOR BEAM CONNECTIONS

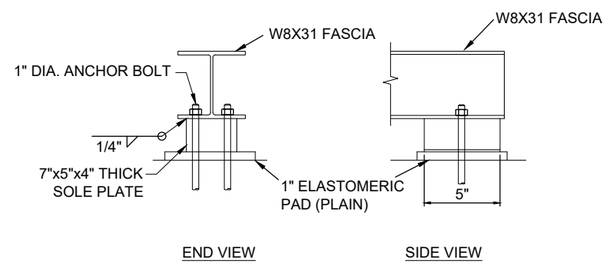

END VIEW

SIDE VIEW

FASCIA STRINGER BEARING

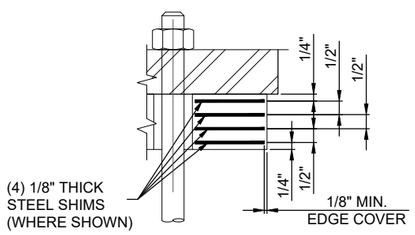

TRUSS BEARING DETAIL

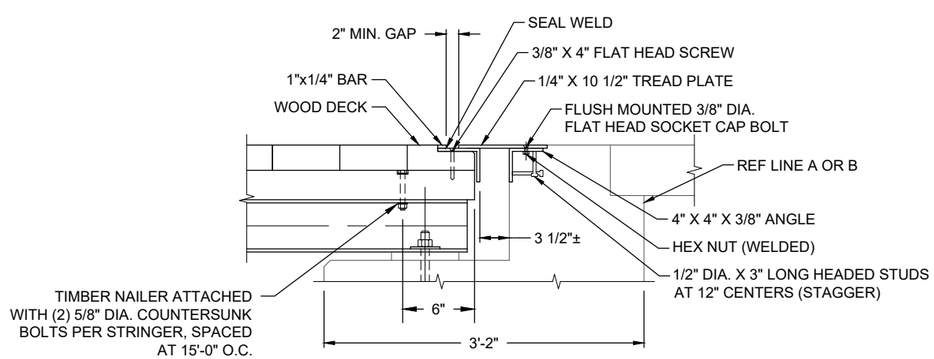

ABUTMENT A/B EXPANSION JOINT DETAIL

NOTE: COMPLETE ASSEMBLY TO BE STAINLESS STEEL, PAID FOR AS STRUCTURAL STEEL, MIXED, FURN AND FAB AND STRUCTURAL STEEL, MIXED, ERECT

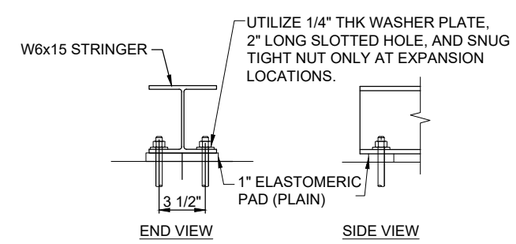

END VIEW

SIDE VIEW

TRUSS STRINGER BEARING

ELASTOMERIC PAD AND SHIM TABLE

UNITS ARE IN INCHES	ABUT. A PIER 1 (SPAN 1) PIER 1 (SPAN 2) ABUT. B		
	TRUSS	STRINGER	FASCIA
THICKNESS	2.5	1	1
PARALLEL TO BEAM (W)	10	5	6
PERPENDIC TO BEAM (W)	19	7	8
SHIMS	4 @ .12		
LAYERS	3 @ .5		
NO. REQD	8	24	8

12/19/2024 3:58 PM austin.evans

FINAL PLAN REVISIONS

NO.	DATE	AUTH	DESCRIPTION

SAGINAW OFFICE
230 S. Washington Ave.
Saginaw, MI 48607
Tel. 989-754-4717
Fax. 989-754-4440
www.SpicerGroup.com

VERT. (FT) 0 N/A
HORZ. (FT) 0 N/A

SGI PROJECT NO: 131018SG2021
DATE: DECEMBER, 2024
FILE: DB-1234- STRUCTURALSTEELDETAILS2.DWG

CS: 56000
JN: 212097

STRUCTURAL STEEL DETAILS-2
BAILEY BRIDGE AT SMITHS CROSSING

DRAWING: STRUCT 2
SHEET: 45

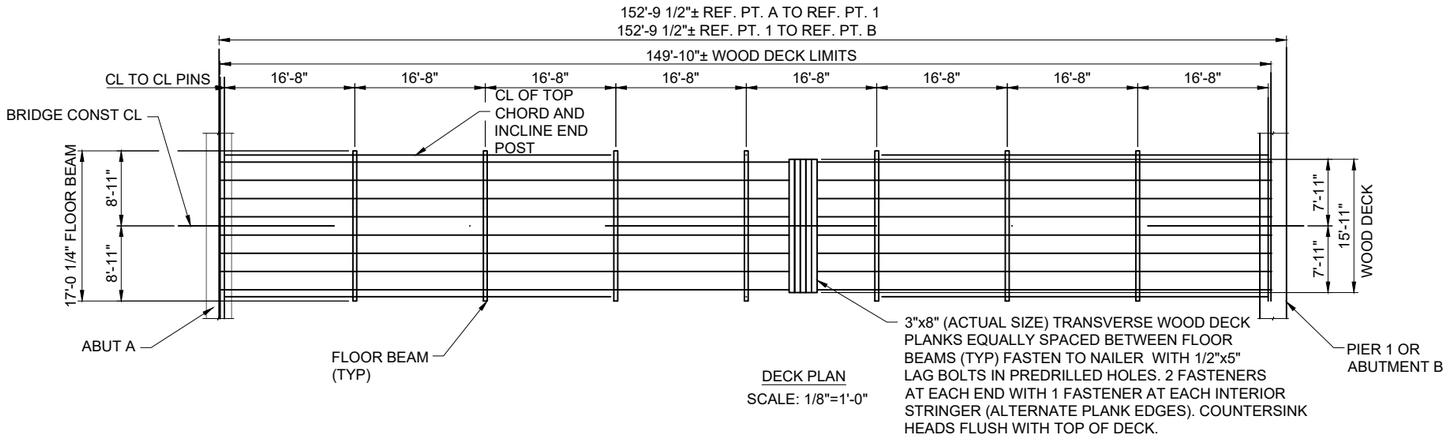

DECK PLAN

SCALE: 1/8"=1'-0"

MISCELLANEOUS QUANTITIES

4767		Sft	Wood Deck

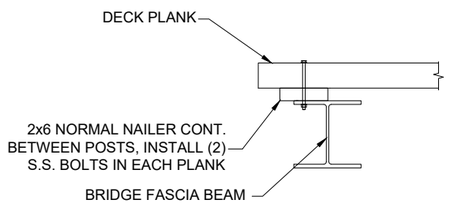

DECK PLANK SUPPORT AT BRIDGE FASCIA BEAM

NTS

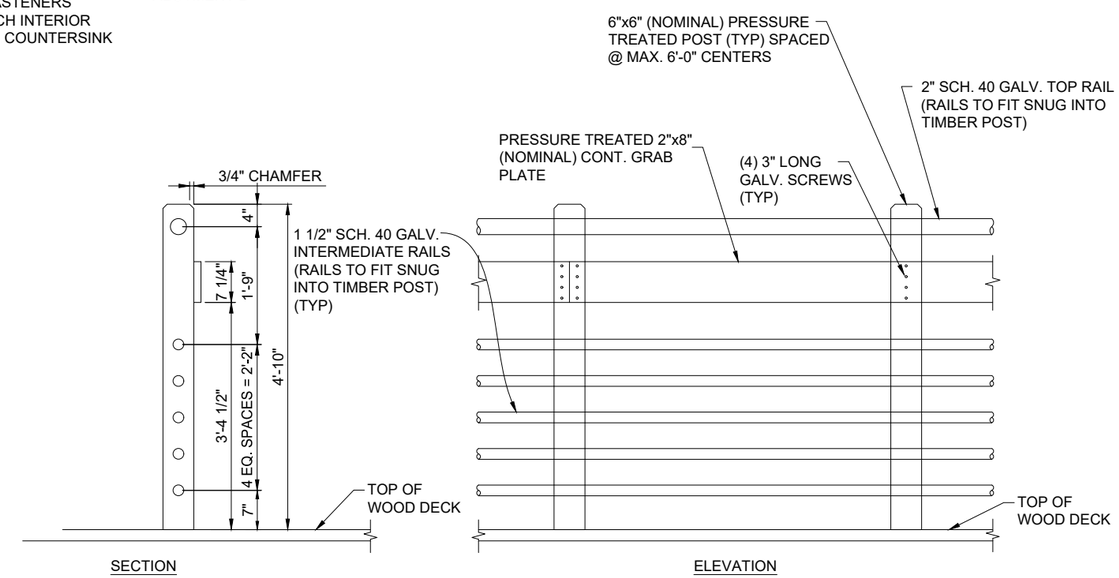

TYPICAL PEDESTRIAN RAILING PANEL

SCALE: 1"=1'-0"

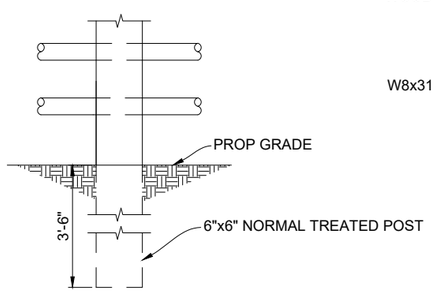

APPROACH POSTS

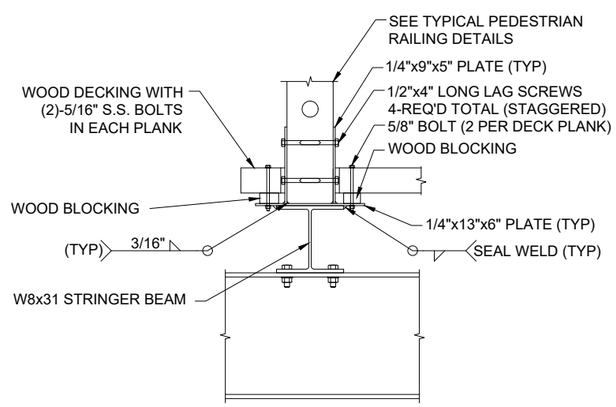

AT BRIDGE

6-TUBE HANDRAIL POST BASE DETAIL

FINAL PLAN REVISIONS			
NO.	DATE	AUTH	DESCRIPTION

SAGINAW OFFICE
230 S. Washington Ave.
Saginaw, MI 48607
Tel. 989-754-4717
Fax. 989-754-4440
www.SpicerGroup.com

VERT. (FT) 0 N/A
HORZ. (FT) 0 N/A

SGI PROJECT NO: 131018SG2021
DATE: DECEMBER, 2024
FILE: DB-1234- SUPERSTRUCTUREDETAILS.DWG

CS: 56000
JN: 212097

SUPERSTRUCTURE DETAILS
BAILEY BRIDGE AT SMITHS CROSSING

DRAWING: SSTRUCT
SHEET: 46

12/19/2024 3:58 PM matthew.sopcak

	BAR	DIMENSIONS									NO. REQ'D	TOTAL WEIGHT
		a	b	c	d	e	f	g	h	j		
ABUTMENTS A & B	EA042606	26'-6"									4	71
	EA051908	19'-8"									145	2975
	EA051204	12'-4"									145	1866
	EA063402	34'-2"									60	3079
	EA062607	26'-7"									28	1118
	EA081910	19'-10"									34	1800
	EA081710	17'-10"									74	3524
	EA081705	17'-5"									256	11905
	EA081700	17'-0"									34	1543
	EA081500	15'-0"									74	2964
	EA081111	11'-11"									8	255
	EA081003	10'-3"									24	657
	EA081000	10'-0"									108	2884
	EA080908	9'-8"									40	1032
	EA080901	9'-1"									8	194
	EA081705	17'-5"									128	5952
	EB081503	8'-0"	7'-3"								240	9772
	EB081009	7'-3"	3'-6"								240	6889
	EB080408	2'-4"	2'-4"								72	897
	EB081203	7'-0"	5'-3"								124	4056
	EB080809	5'-3"	5'-8"								124	3614
	EC060708	0'-8"	5'-8"	0'-8"	0'-8"	1'-0"	0'-8"	1'-0"			72	829
	ED040510	2'-8"	0'-6"	2'-8"							56	218
	ED060704	2'-4"	2'-8"	2'-4"							64	705
	ED060602	2'-4"	1'-6"	2'-4"							128	1186
									SUB-TOTAL			69985
PIER 1	EA062606	26'-6"									20	796
	EA063109	31'-9"									94	4483
	EA061810	18'-10"									66	1868
	EA070706	7'-6"									108	1656
	EB060504	4'-4"	1'-0"								90	721
	ED060710	2'-8"	2'-6"	2'-8"							23	271
	ED060700	2'-4"	2'-4"	2'-4"							2	21
	ED060601	2'-4"	1'-5"	2'-4"							2	18
	ER061002	2'-6"	2'-4"	2'-9"	2'-6"						64	977
									SUB-TOTAL			10811

BAR BENDING DIAGRAMS

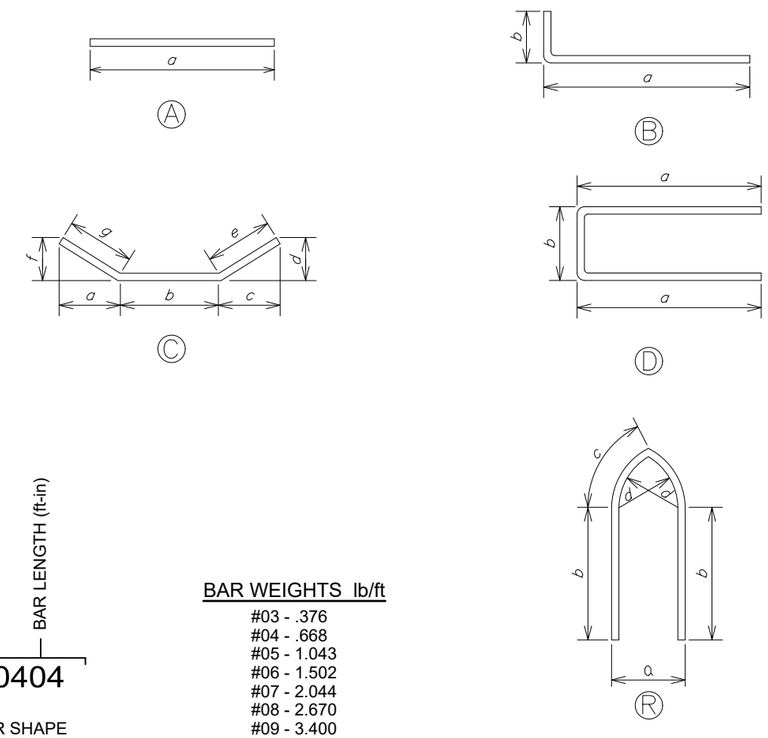

EA160404

- EPOXY COATED
- BAR SIZE
- BAR LENGTH (ft-in)
- BAR SHAPE

BAR LEGEND

BAR WEIGHTS lb/ft

#03 - .376
#04 - .668
#05 - 1.043
#06 - 1.502
#07 - 2.044
#08 - 2.670
#09 - 3.400
#10 - 4.303
#11 - 5.313

NOTES:

REINFORCEMENT SHALL BE BUNDLED AND TAGGED AS TO THE LOCATION AS SHOWN ON THIS SHEET.

REINFORCEMENT IS TO BE SHOP CUT AS SHOW. THE EPOXY COATING SHALL BE REPAIRED ACCORDING TO THE STANDARD SPECIFICATIONS.

CONSTRUCTION QUANTITIES - THIS SHEET

80796		Lb	Reinforcement, Steel, Epoxy Coated

12/19/2024 3:58 PM matthew.sopcak

FINAL PLAN REVISIONS			
NO.	DATE	AUTH	DESCRIPTION

SAGINAW OFFICE
230 S. Washington Ave.
Saginaw, MI 48607
Tel. 989-754-4717
Fax. 989-754-4440
www.SpicerGroup.com

VERT. (FT) 0 N/A
HORZ. (FT) 0 N/A

SGI PROJECT NO: 131018SG2021
DATE: DECEMBER, 2024
FILE: DB-1234- STEELREINF.DWG

CS: 56000
JN: 212097

REINFORCEMENT STEEL DETAILS
BAILEY BRIDGE AT SMITHS CROSSING

DRAWING: REBAR
SHEET: 47